5000 series

L5027MG400E

Features

- The resolution is 2K, the pixel size is 7um, and the maximum line frequency can reach 59K;
- High dynamic range, good signal-to-noise ratio, and excellent image quality;
- Support a variety of image data format output;
- Support 2TDI, 4TDI;
- Support multiple ROI, FPN correction;
- Support Gamma, LUT, automatic black level and other ISP functions;
- Support software trigger/hardware trigger/free run and other trigger modes;
- Compatible with GigE Vision V2.0 protocol and GenICam standard;
- Support DC12-24V wide voltage power supply;

Dimensions (mm)

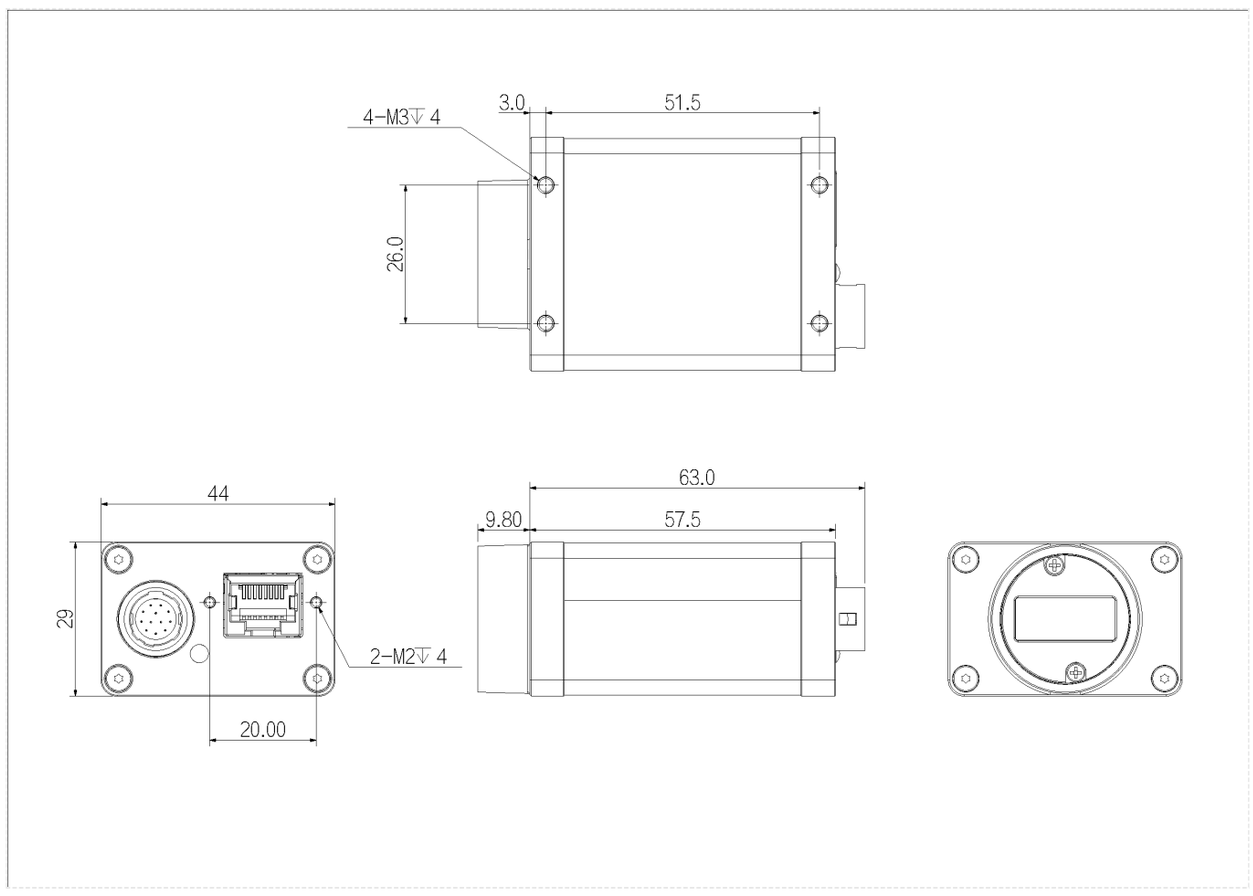

Specification

Model		L5027MG400E
Basic	Sensor	2K
	Image Sensor	Gpixel
	Shutter	Global
	Resolution	2048 × 4
	Line Rate	59 kHz
	Bit Depth	12
	Mono/Color	Mono
	Pixel Size	7 × 7
Image	Pixel	2048×4
	S/N Ratio	39.6 db
	WDR	65.5 db
	Image Format	Mono8/10/12/10P/12P
	Binning	Support
	ROI	Support
	X Flip	Support
	Gain	1~32
	Gamma	From 0 to 4，support LUT
	Exposure Time	8 μS~100 mS
	Trigger Mode	Software Trigger/Hardware Trigger/Free Run Mode
	FPN	Support
Performance	User Setting	Support two sets of user-defined configurations
	Image Buffer	64MB Image Cache，64M Data Cache
Port	Port	GigE
	GPIO Interface	12-pin Hirose interface for external power supply and external triggering; 2 differential/single-ended inputs, 1 differential configurable input or output, 1 high-speed optocoupler single-ended input, 1 GPIO configurable input or output
	Lens Mount	C-Mount
Power	Power Supply	DC12-24V power supply
	Power Consumption	4.6 W
Structure	Product Dimensions	29 mm×44 mm×58 mm(Not including rear case connector)
	Weight	100 g
Environment	Working Environment	Storage：- 30℃~+80℃；Operation：- 30℃~+50℃

Connector Pin-out

Port definitions of 12-pin signals:

Pin	Description	Features
1	Power GND	Power ground
2	Camera Power	Power Supply
3	IN Line1+	Input Line1+
4	IN Line1-	Input Line1-
5	Signal GND	Signal ground
6	IN Line2+	Input Line2+
7	IN Line2-	Input Line2-
8	IN Line4	Bidirectional GPIO Line4
9	IN/OUT Line3+	Configurable input/output Line3+
10	IN/OUT Line3-	Configurable input/output Line3-
11	OPT_IN Line5	Opto-isolated input Line5
12	OPT GND	Opto-isolated ground point

Port definitions of 12-pin signals

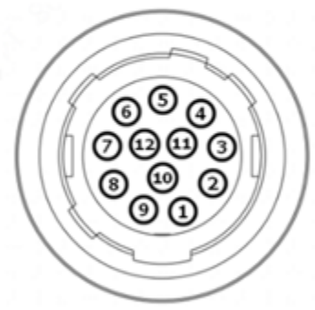
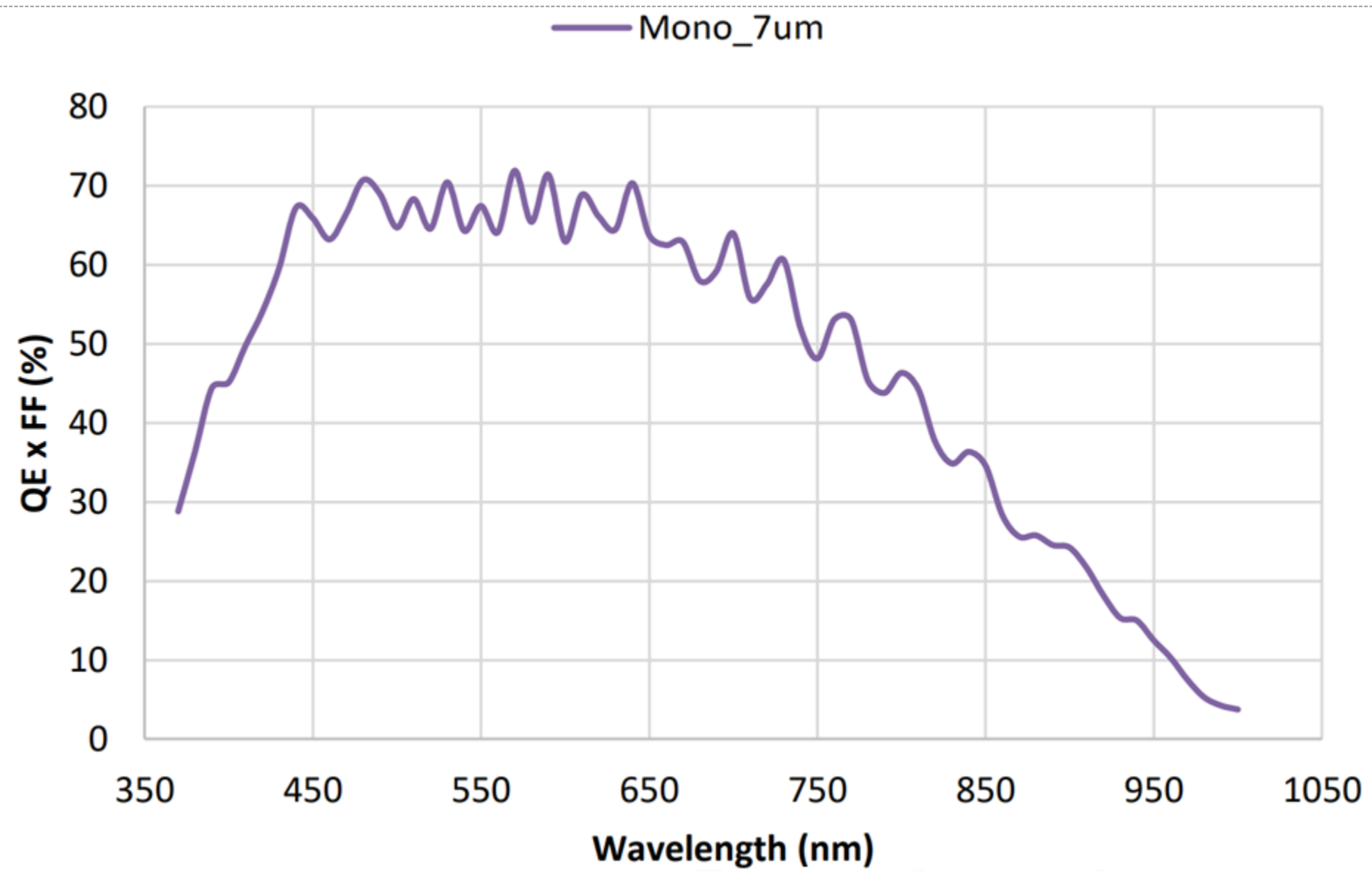
Spectrogram