Large Area Scan Series

AX7Q10MX770E

Features

- CXP-6 interface, 4 x 6.25Gbps theoretical transfer bandwidth;
- Support hardware trigger/free run mode;
- Support pixel-by-pixel FFC function;
- Support multiple image data formats output, ROI and etc. ;
- Support TEC cooling ;
- Support PoCXP and DC 24V power supply;
- Conforms to CoaXPress protocol and GenICam standard;
- Conform to CE, FCC, KC and RoHS;

Dimensions (mm)

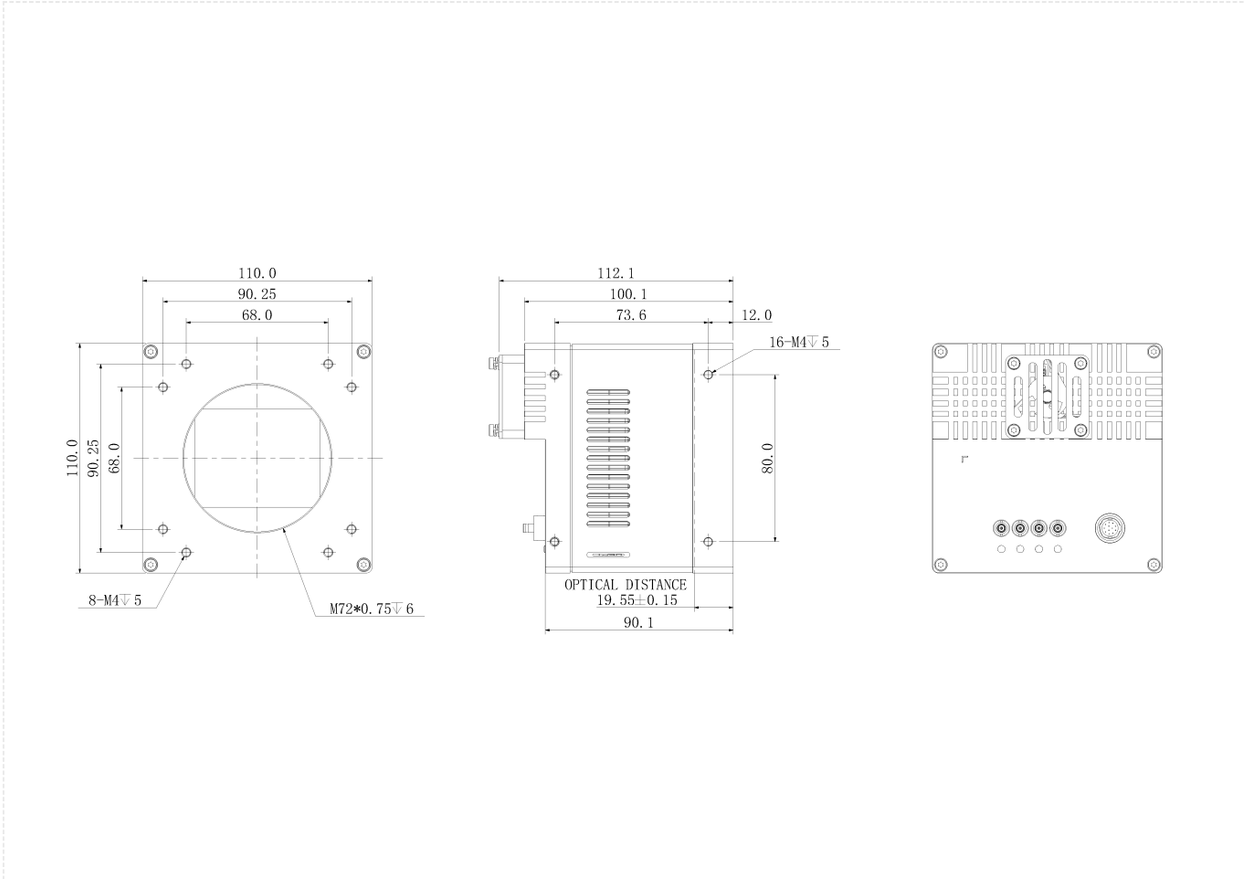

Specification

Model		AX7Q10MX770E
Basic	Sensor	IMX411
	Image Sensor	53.4 mm x 40.0 mm CMOS
	Shutter	Rolling
	Resolution	14192 x 10640
	Frame Rate	6.2 fps
	Bit Depth	12 bit
	Mono/Color	Mono
	Pixel Size	3.76 μm x 3.76 μm
Image	Pixel	151 MP
	S/N Ratio	45 dB
	WDR	78 dB
	Image Format	Mono8/10/12
	ROI	Support
	X Flip	Support
	Y Flip	Support
	Gain	Analog gain: 1x ~ 63x, Digital gain: 1x ~ 100x
	Exposure Time	30 μs ~ 5 s
	Trigger Mode	Software Trigger/Hardware Trigger/Free Run Mode
	SPC	Support
Performance	User Setting	Support two sets of user-defined configurations
Port	Port	CXP-6
	GPIO Interface	3x Opto-isolated input, 3x Opto-isolated output;1x RS232
	Lens Mount	M72 x 0.75
Power	Power Supply	DC 24V power supply via 12 Hirose interface，support PoCXP
	Power Consumption	24 V ≈ 51.6 W
Structure	Product Dimensions	110 mm x 110 mm x 90.1 mm (Non including rear case connector)
	Weight	1 kg
Environment	Working Environment	Storage：-30℃ ~ 80℃；Opeartion：-30℃ ~ 50℃

Connector Pin-out

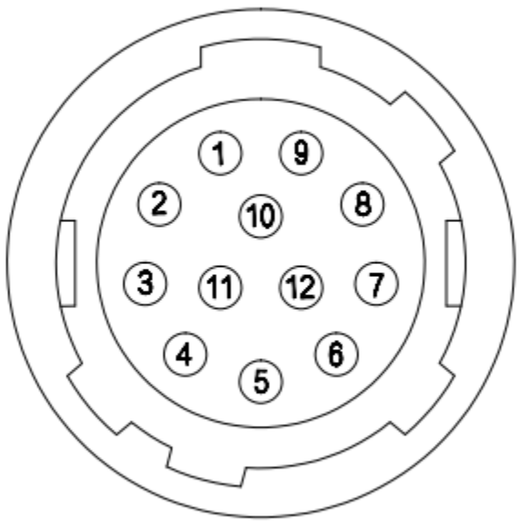

Pin	Signal	Description
1	GND	Power and signal GND
2	Power	Power supply
3	RXD RS232	Serial receive
4	TXD RS232	Serial send
5	Line3	Opto-isolated input
6	Line4	Opto-isolated input
7	Line5	Opto-isolated input
8	OPT_IN_GND	Opto-isolated input GND
9	Line0	Opto-isolated output
10	Line1	Opto-isolated output
11	Line2	Opto-isolated output
12	OPT_OUT_GND	Opto-isolated output GND
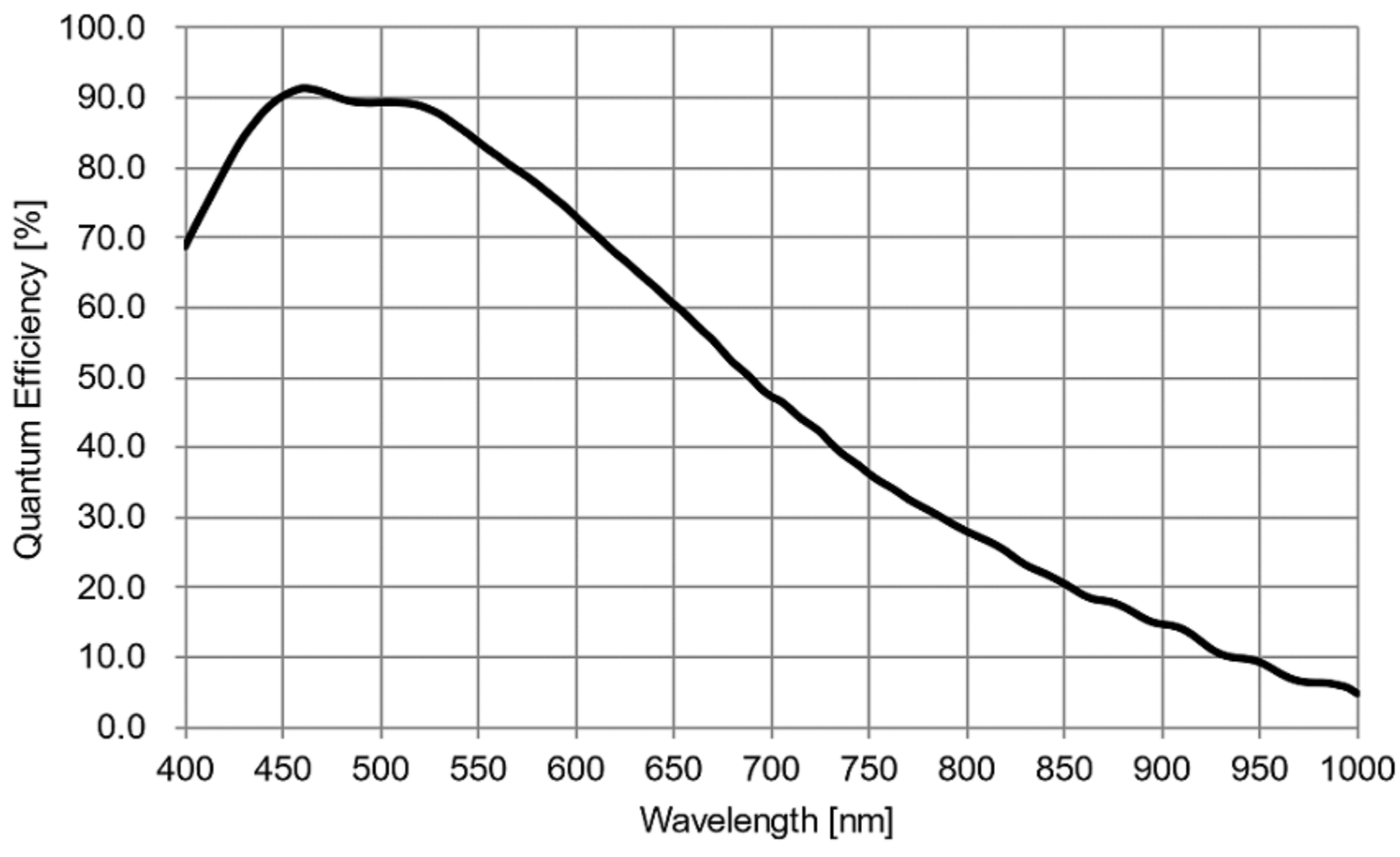
Spectrogram