Large Area Scan Series

AX7Q00MK470E

Features

- Patented flatness adjustment scheme to prevent partial defocusing;
- Excellent heat dissipation design, precise temperature control and constant temperature maintenance;
- Support Software Trigger/Hardware Trigger/Free Run Model, support trigger via CameraLink acquisition board;
- Support user-defined ROI, horizontal mirror;
- Support ISP functions including Auto Exposure/Auto Gain/Contrast/Gamma Correction/LUT etc.;
- Support for FFC function to provide more uniform picture quality;
- Support mutil-frame average function, up to 16 frames averaging;
- Support fan speed adaptive function for setting the target temperature of the sensor;
- Support DC 24V power supply;
- Conform to CameraLink protocol and GenICam standard;

Dimensions (mm)

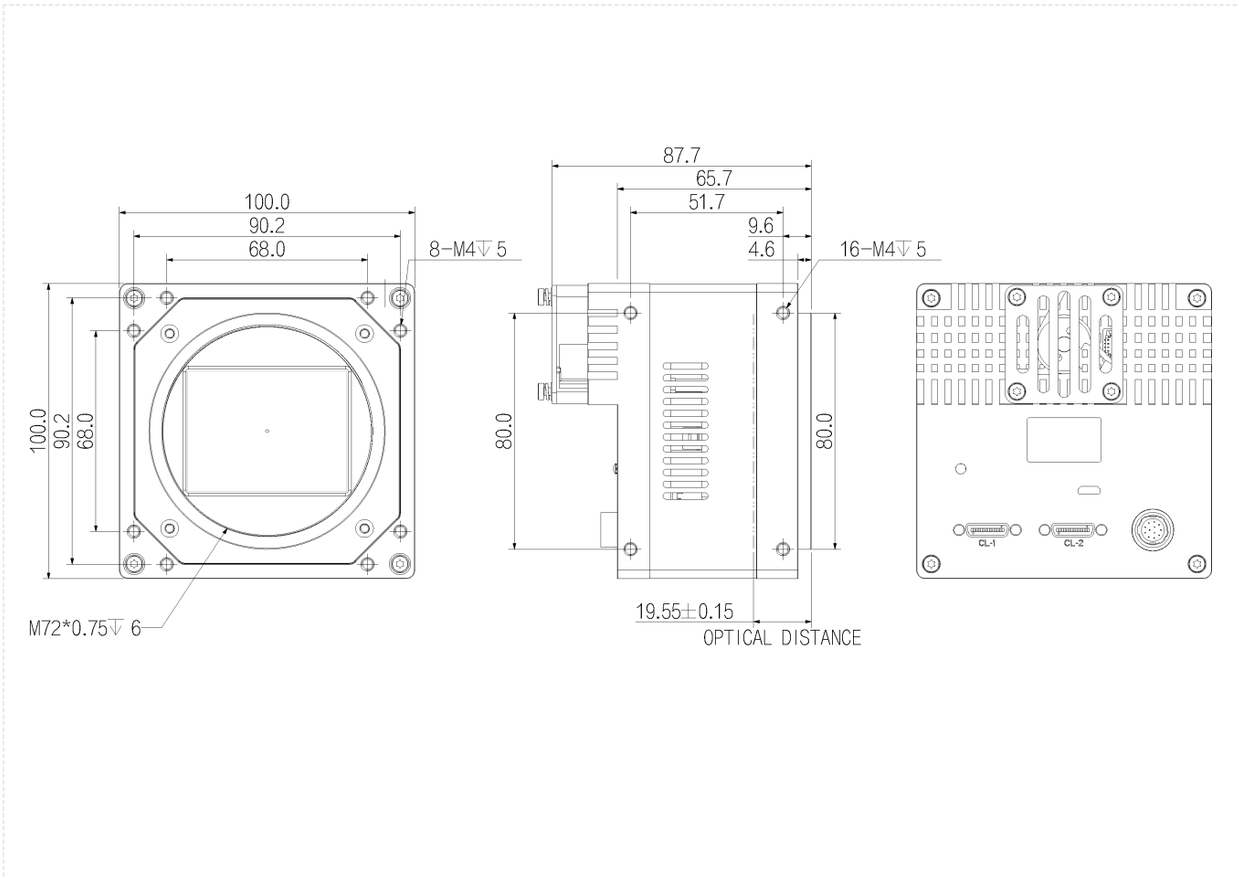

Specification

Model		AX7Q00MK470E
Basic	Sensor	IMX411
	Image Sensor	53.4 mm x 40.0 mm CMOS
	Shutter	Rolling
	Resolution	14160 x 10640
	Frame Rate	5.1 fps
	Bit Depth	12 bit
	Mono/Color	Mono
	Pixel Size	3.76 μm x 3.76 μm
Image	Pixel	151 MP
	S/N Ratio	45 dB
	WDR	90 dB
	Image Format	Mono8/10/12
	ROI	Support
	X Flip	Support
	Gain	1 ~ 32
	Gamma	0 ~ 4 , Support LUT
	Exposure Time	3 μs ~ 15 s
	Trigger Mode	Software Trigger/Hardware Trigger/Free Run Mode
	SPC	Support
Performance	User Setting	Support two sets of user-defined configurations
Port	Port	CameraLink
	GPIO Interface	3x Opto-isolated input, 3x Opto-isolated output;1x RS232
	Lens Mount	M72 x 0.75
Power	Power Supply	DC 24V power supply via 12 Hirose interface
	Power Consumption	24 V ≈ 18 W
Structure	Product Dimensions	100 mm x 100 mm x 65.7 mm (Non including rear case connector)
	Weight	890 g
Environment	Working Environment	Storage：-30℃ ~ 80℃；Opeartion：-30℃ ~ 50℃

Connector Pin-out

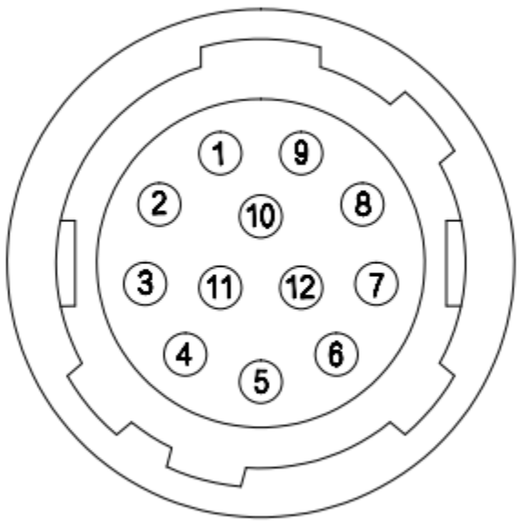

Pin	Signal	Description
1	GND	Power and signal GND
2	Power	Power supply
3	RXD RS232	Serial receive
4	TXD RS232	Serial send
5	Line3	Opto-isolated input
6	Line4	Opto-isolated input
7	Line5	Opto-isolated input
8	OPT_IN_GND	Opto-isolated input GND
9	Line0	Opto-isolated output
10	Line1	Opto-isolated output
11	Line2	Opto-isolated output
12	OPT_OUT_GND	Opto-isolated output GND
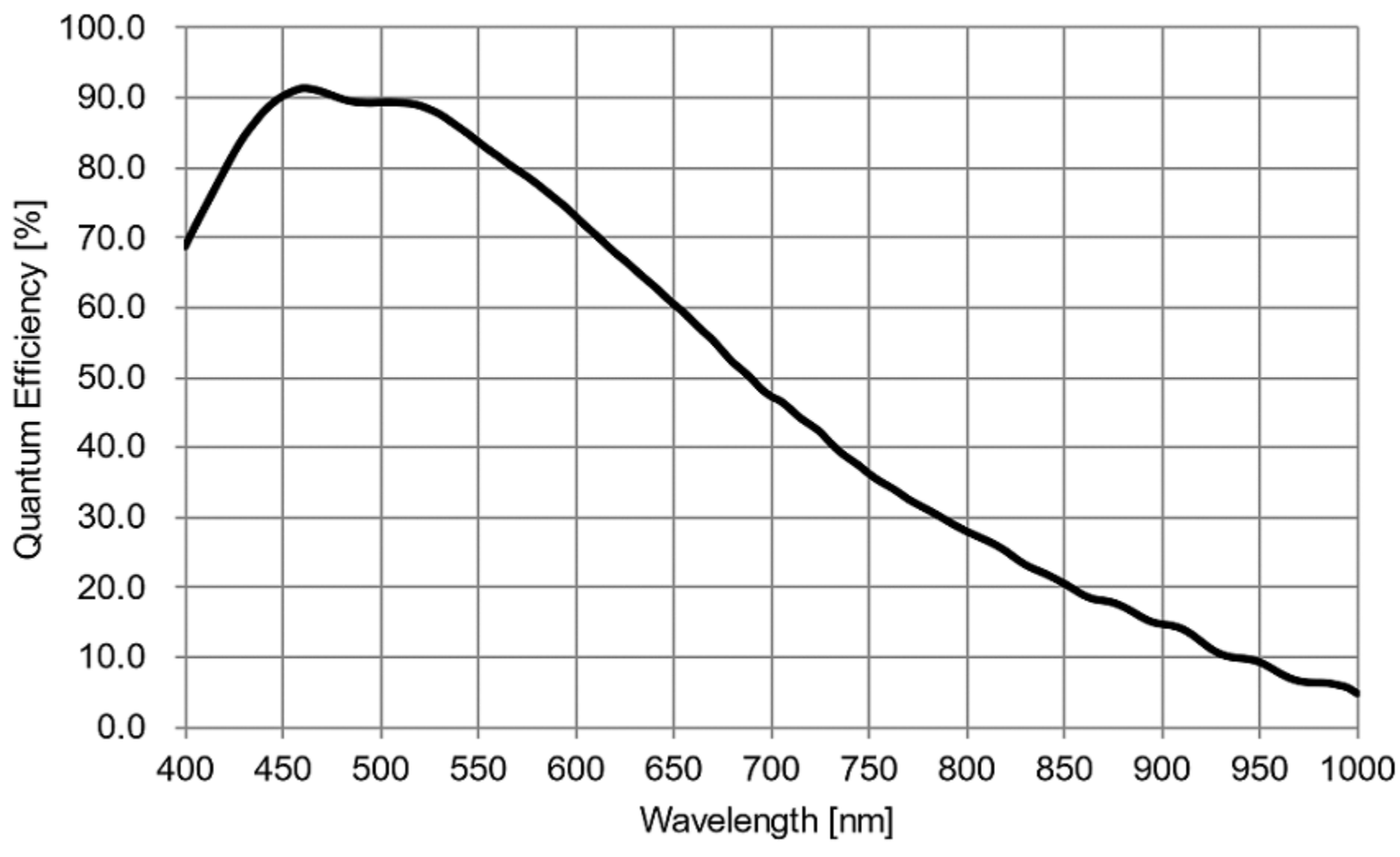
Spectrogram