Large Area Scan Series

AX5F57CK250E

Features

- A pantented flatness mediation scheme to eliminate area defocusing;
- Excellent heat dissipation design, precise temperature control and constant, temperature maintenance;
- Support Software Trigger/Hardware Trigger/Free Run Mode, support to use CameraLink acquisition card to trigger the camera;
- Support custom ROI, vertical mirror;
- With 10TAP outputs, the frame rate of up to 12.5fps at 85M clock for 65MP and 17.5fps at 85M clock for 50MP;
- Support automatic exposure, Gamma, LUT, and other ISP function;
- Color camera support automatic white balance ;
- Support for FFC function to provide more uniform picture quality;
- Support fan speed adaptive function for setting the target temperature of the sensor;
- Conform to CameraLink protocol and GenICam standard;

Dimensions (mm)

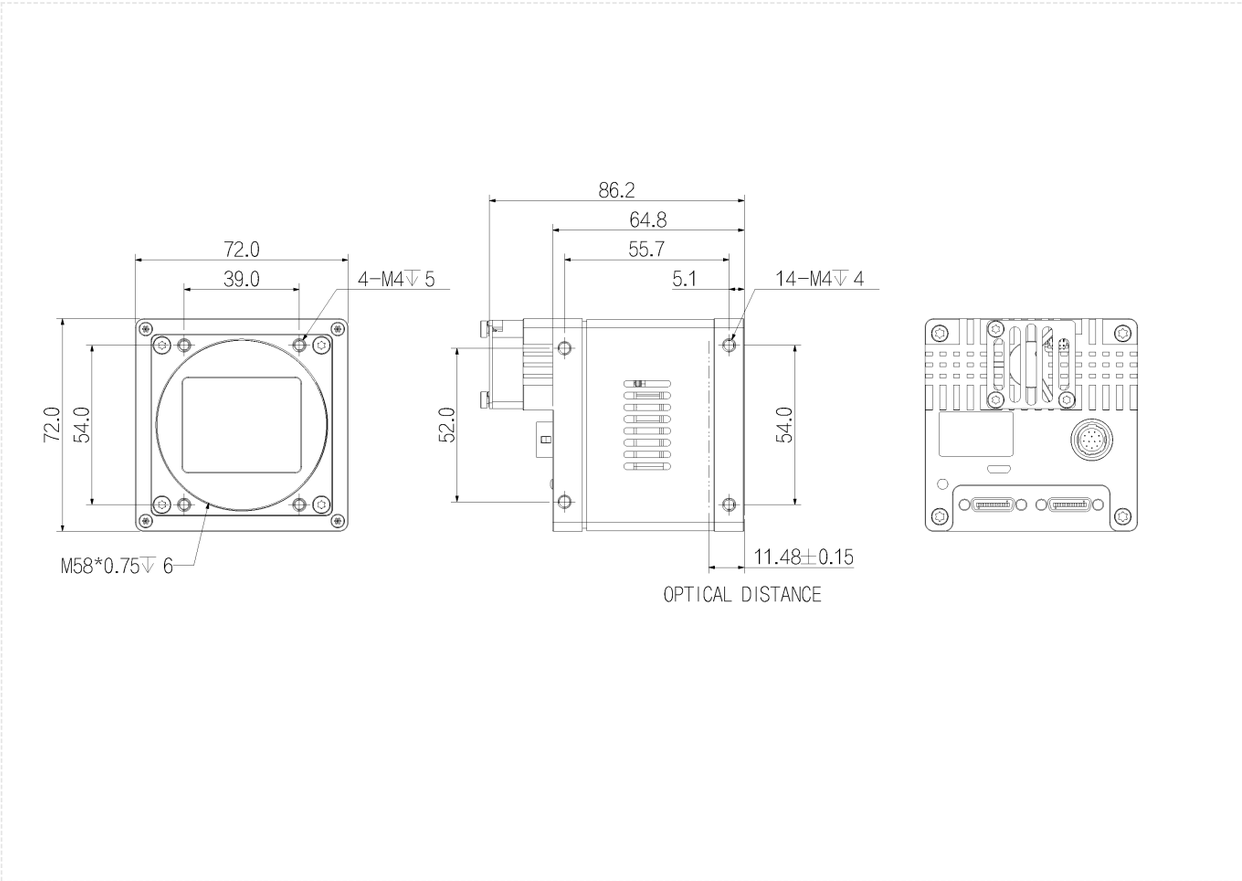

Specification

Model		AX5F57CK250E
Basic	Sensor	GMAX3265
	Image Sensor	29.9 mm × 22.4 mm CMOS
	Shutter	Global
	Resolution	9280 × 6992
	Frame Rate	12.5 fps
	Bit Depth	12
	Mono/Color	Color
	Pixel Size	3.2 × 3.2
Image	Pixel	65MP
	S/N Ratio	40dB
	WDR	66dB
	Image Format	BayerGB8\BayerGB10
	ROI	Support
	Y Flip	Support
	Gain	1~32
	White Balance	Support
	Gamma	The range of 0 ~ 4,support LUT
	Exposure Time	16μS~15S
	Trigger Mode	Software Trigger/Hardware Trigger/Free Run Mode
	SPC	Support
Performance	User Setting	Support two sets of user-defined configurations
	Image Buffer	512MB data storage
Port	Port	CameraLink
	GPIO Interface	3x Opto-isolated input, 3x Opto-isolated output, 1x RS232
	Lens Mount	M58 x 0.75
Power	Power Supply	DC 24V power supply via 12 Hirose interface
	Power Consumption	24V≈6.83W
Structure	Product Dimensions	72mm*72mm*65mm(Not including rear case connector)
	Weight	490g
Environment	Working Environment	Storage：- 30℃~+80℃；Operation：- 30℃~+50℃

Connector Pin-out

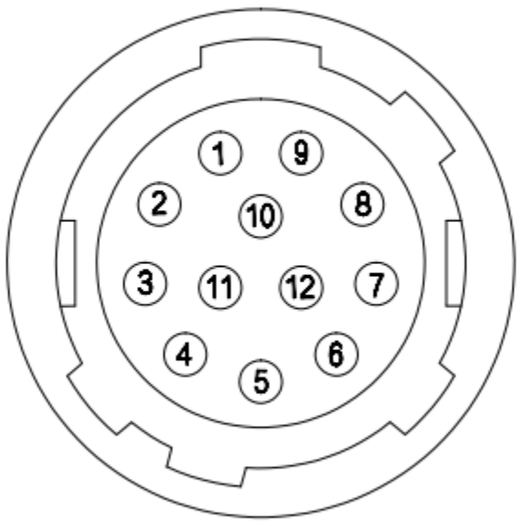

Pin	Signal	Description
1	GND	Power and signal GND
2	Power	Power supply
3	RXD RS232	Serial receive
4	TXD RS232	Serial send
5	Line3	Opto-isolated input
6	Line4	Opto-isolated input
7	Line5	Opto-isolated input
8	OPT_IN_GND	Opto-isolated input GND
9	Line0	Opto-isolated output
10	Line1	Opto-isolated output
11	Line2	Opto-isolated output
12	OPT_OUT_GND	Opto-isolated output GND
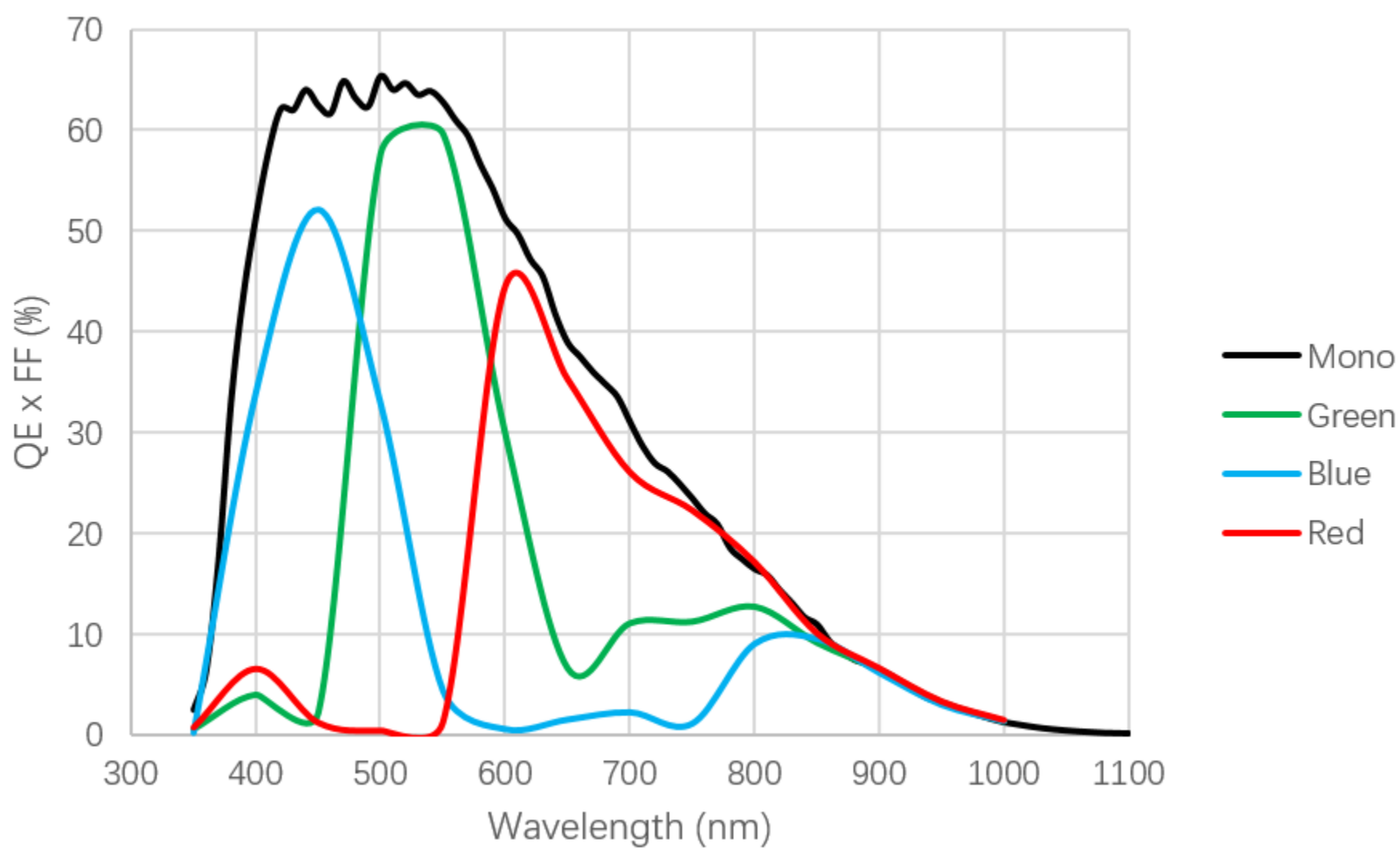
Spectrogram