Large Area Scan Series

AX5E07MX250E

Features

- CXP-6 interface, 4 x 6.25Gbps theoretical transfer bandwidth;
- Support hardware trigger/free run mode;
- Support pixel-by-pixel FFC function;
- Support multiple image data formats output, ROI and etc. ;
- Support PoCXP and DC 24V power supply;
- Conforms to CoaXPress protocol and GenICam standard;
- Conform to CE, FCC, KC and RoHS;

Dimensions (mm)

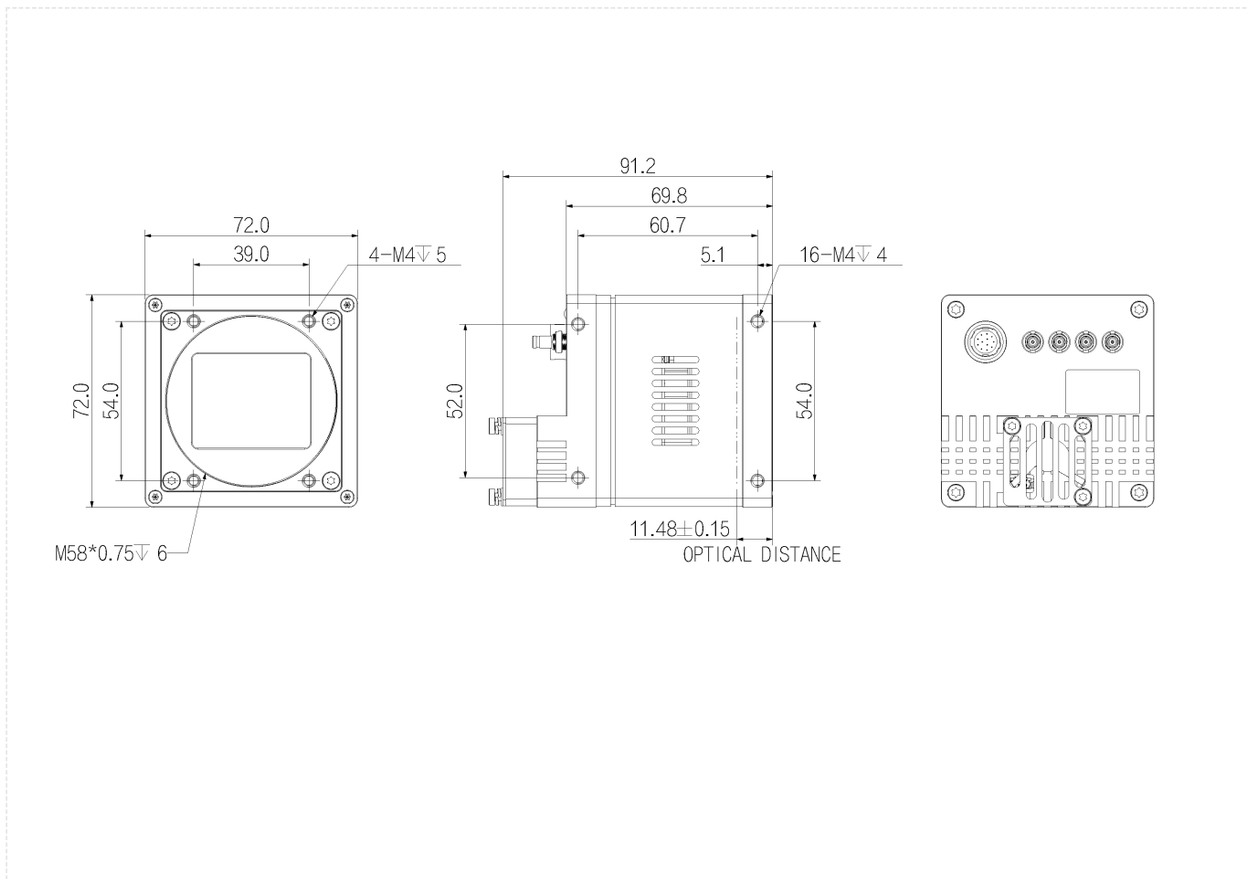

Specification

Model		AX5E07MX250E
Basic	Sensor	Customize
	Image Sensor	29.9 mm x 16.0 mm CMOS
	Shutter	Global
	Resolution	9344 x 5000
	Frame Rate	44 fps
	Bit Depth	12 bit
	Mono/Color	Mono
	Pixel Size	3.2 μm x 3.2 μm
Image	Pixel	50 MP
	S/N Ratio	40 dB
	WDR	66 dB
	Image Format	Mono8/10/12
	ROI	Support
	X Flip	Support
	Y Flip	Support
	Gain	Analog gain: 1x ~ 4.8x, Digital gain: 1x ~ 100x
	Exposure Time	27 μs ~ 5 s
	Trigger Mode	Software Trigger/Hardware Trigger/Free Run Mode
	SPC	Support
Performance	User Setting	Support two sets of user-defined configurations
Port	Port	CXP-6
	GPIO Interface	3x Opto-isolated input, 3x Opto-isolated output;1x RS232
	Lens Mount	M58 x 0.75
Power	Power Supply	DC 24V power supply via 12 Hirose interface，support PoCXP
	Power Consumption	24 V ≈ 21.6 W
Structure	Product Dimensions	72 mm x 72 mm x 69.8 mm (Non including rear case connector)
	Weight	690 g
Environment	Working Environment	Storage：-30℃ ~ 80℃；Opeartion：-30℃ ~ 50℃

Connector Pin-out

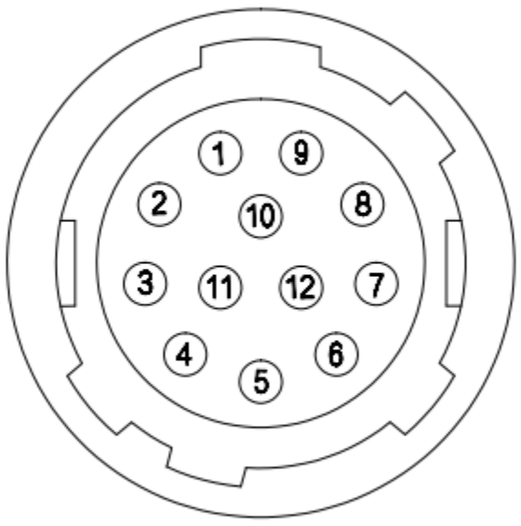

Pin	Signal	Description
1	GND	Power and signal GND
2	Power	Power supply
3	RXD RS232	Serial receive
4	TXD RS232	Serial send
5	Line3	Opto-isolated input
6	Line4	Opto-isolated input
7	Line5	Opto-isolated input
8	OPT_IN_GND	Opto-isolated input GND
9	Line0	Opto-isolated output
10	Line1	Opto-isolated output
11	Line2	Opto-isolated output
12	OPT_OUT_GND	Opto-isolated output GND
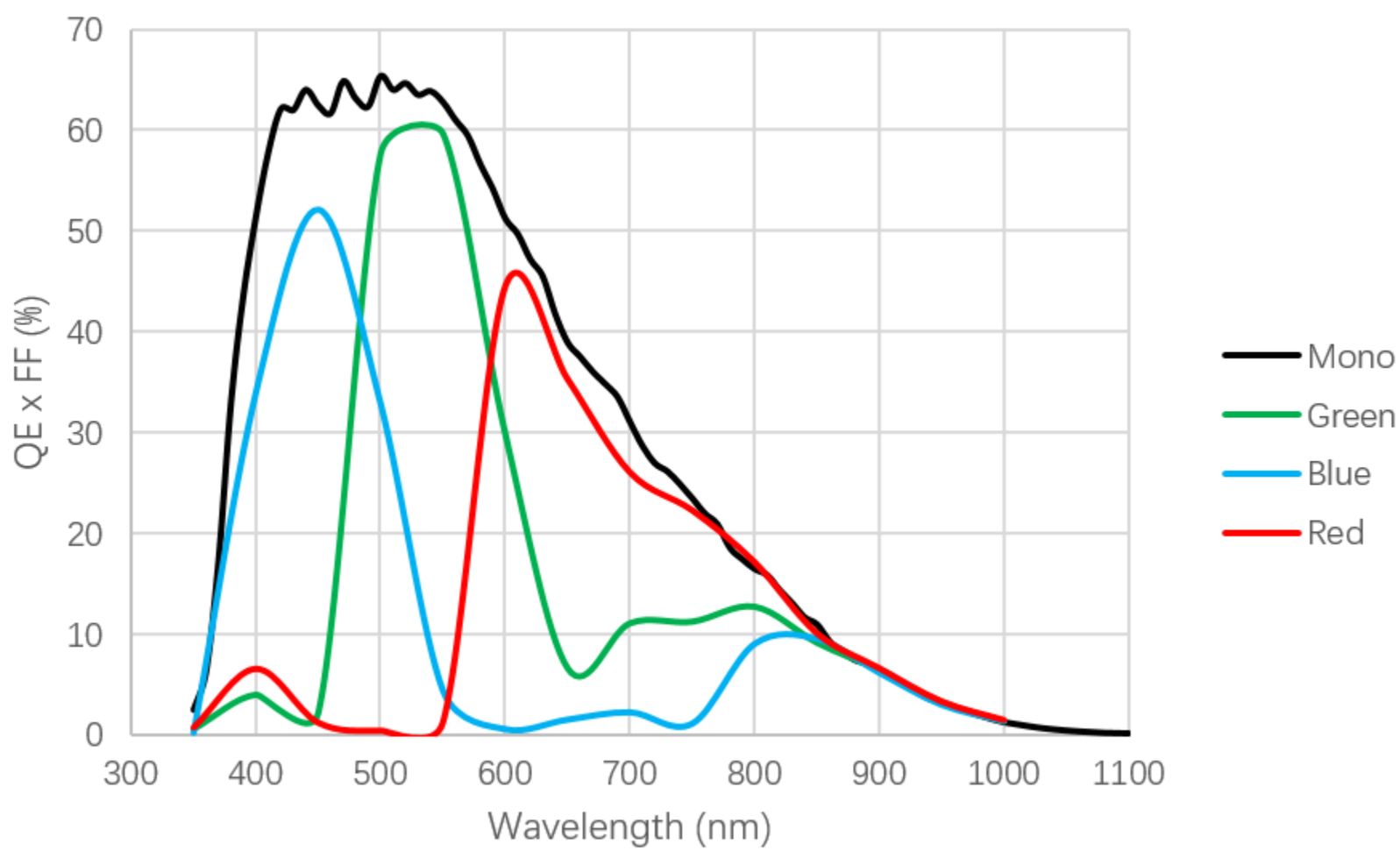
Spectrogram