Large Area Scan Series

AX5B57CT250E

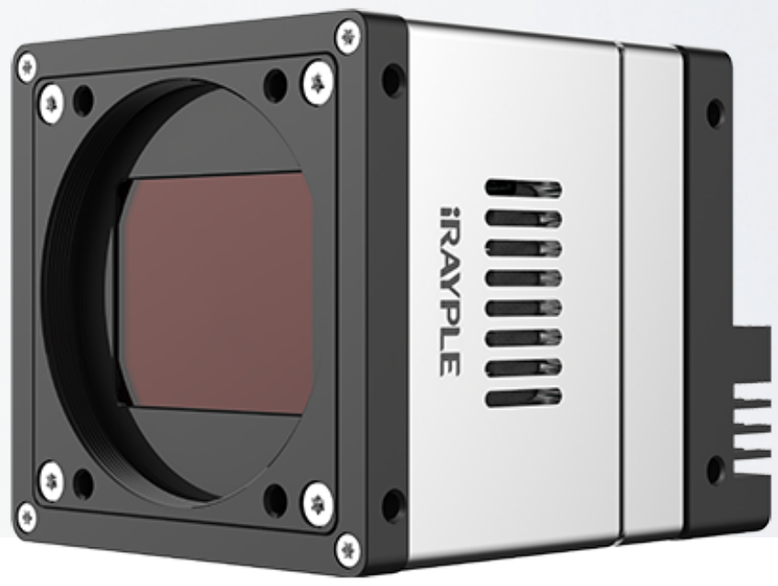

Features

- 10GigE interface, provides up to 10Gbps effective bandwidth;
- A patented flatness mediation scheme to eliminate area defocusing;
- Excellent heat dissipation design, precise temperature control and constant temperature maintenance;
- 1GB on-board cache for data transmission or image resend;
- Support Software Trigger/Hardware Trigger/Free Run mode;
- Support user-defined ROI, horizontal mirror and vertical mirror;
- Support ISP functions including Auto Exposure/Auto Gain/Auto BlackLevel/Gamma Correction/LUT etc.;
- Mono cameras support auto contrast adjustment;
- Support for FFC function to provide more uniform picture quality;
- Support fan speed adaptive function for setting the target temperature of the sensor;

Dimensions (mm)

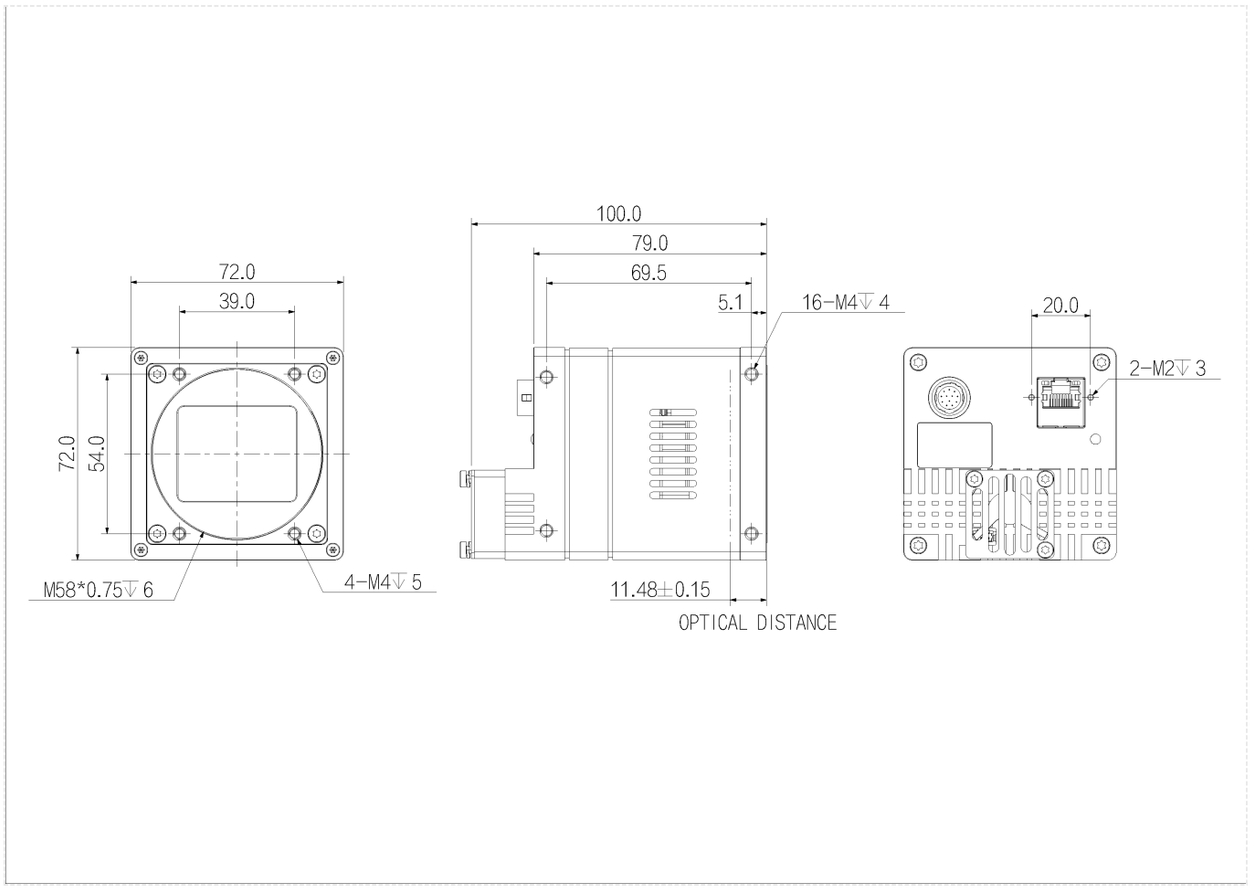

Specification

Model		AX5B57CT250E
Basic	Sensor	GMAX0505
	Image Sensor	1.1" CMOS
	Shutter	Global
	Resolution	5120 x 5120
	Frame Rate	41 fps
	Bit Depth	12 bit
	Mono/Color	Mono
	Pixel Size	2.5 μm x 2.5 μm
Image	Pixel	25 MP
	S/N Ratio	40 dB
	WDR	63 dB
	Image Format	BayerRG8/10/12/10Packed/12Packed, BayerGB8/10/12/GB10Packed/GB12Packed
	ROI	Support
	X Flip	Support
	Y Flip	Support
	Gain	1 ~ 32
	Gamma	0 ~ 4 , support LUT
	Exposure Time	35 μs ~ 15 s
	Trigger Mode	Software Trigger/Hardware Trigger/Free Run Mode
	SPC	Support
Performance	User Setting	Support two sets of user-defined configurations
	Image Buffer	1 GB
Port	Port	10GigE
	GPIO Interface	3x Opto-isolated input, 3x Opto-isolated output, 1x RS232
	Lens Mount	M58 x 0.75
Power	Power Supply	DC 24V power supply via 12-pin Hirose interface
	Power Consumption	24 V ≈ 19.4 W
Structure	Product Dimensions	72 mm x 72 mm x 79 mm (not including rear case connector)
	Weight	600 g
Environment	Working Environment	Storage：-30℃ ~ 80℃；Opeartion：-30℃ ~ 50℃

Connector Pin-out

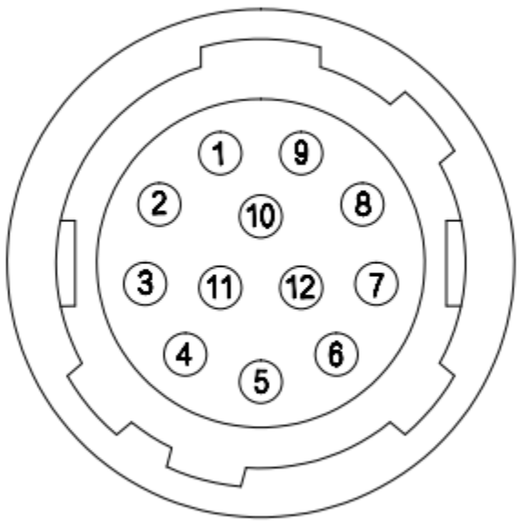

Pin	Signal	Description
1	GND	Power and signal GND
2	Power	Power supply
3	RXD RS232	Serial receive
4	TXD RS232	Serial send
5	Line3	Opto-isolated input
6	Line4	Opto-isolated input
7	Line5	Opto-isolated input
8	OPT_IN_GND	Opto-isolated input GND
9	Line0	Opto-isolated output
10	Line1	Opto-isolated output
11	Line2	Opto-isolated output
12	OPT_OUT_GND	Opto-isolated output GND
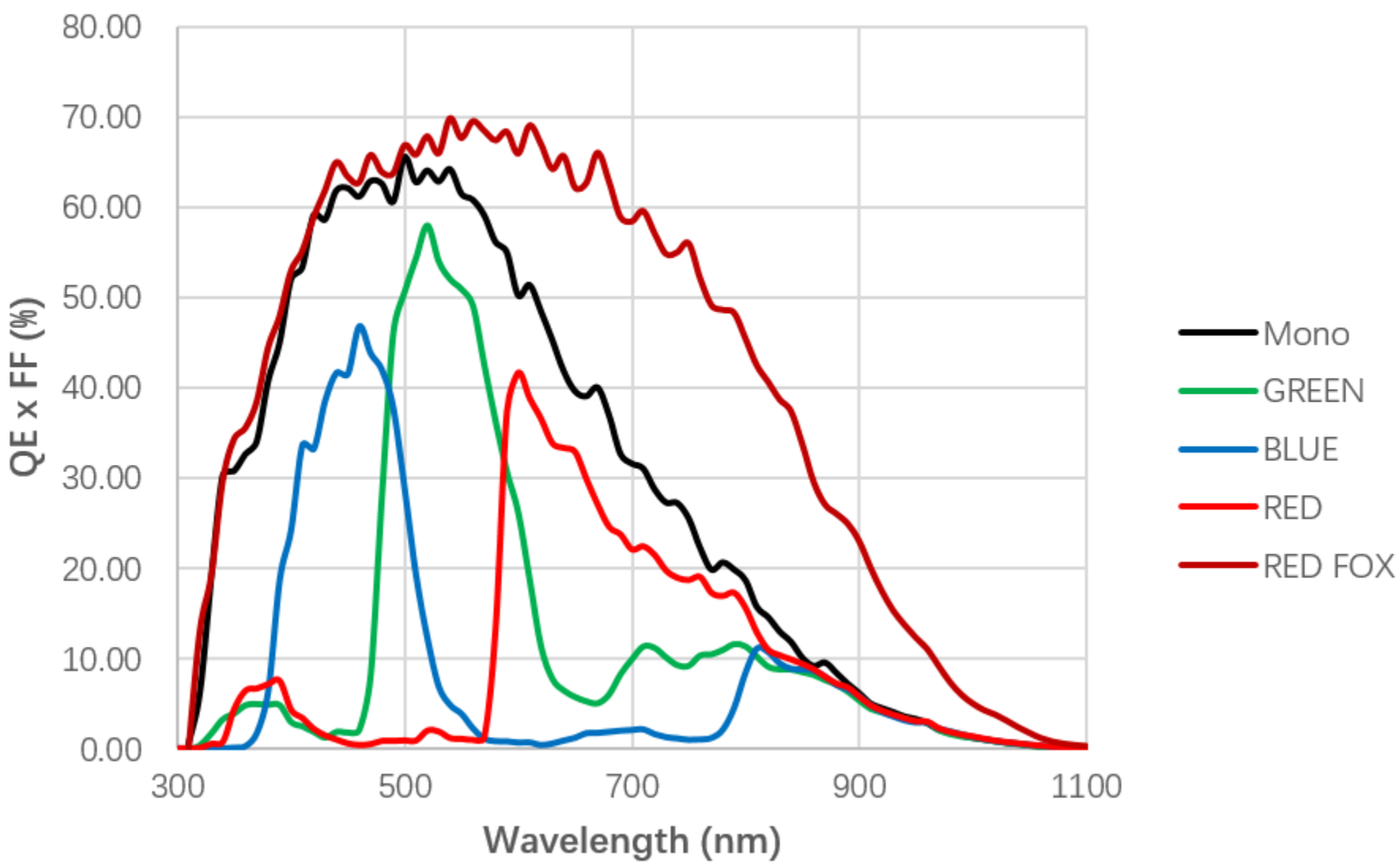
Spectrogram