Large Area Scan Series

AX5B51CT250E

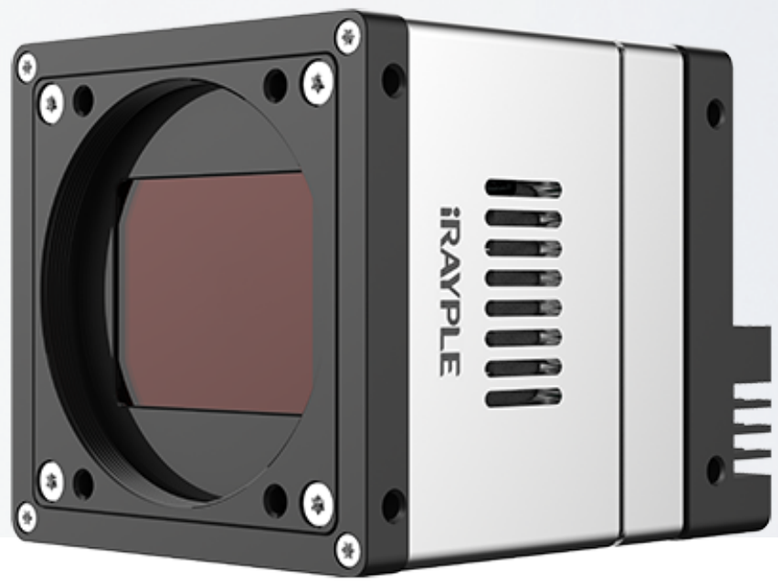

Features

- 10GigE interface, provides up to 10Gbps effective bandwidth;
- A patented flatness mediation scheme to eliminate area defocusing;
- Excellent heat dissipation design, precise temperature control and constant temperature maintenance;
- 1GB on-board cache for data transmission or image resend;
- Support Software Trigger/Hardware Trigger/Free Run mode;
- Support user-defined ROI, horizontal mirror and vertical mirror;
- Support ISP functions including Auto Exposure/Auto Gain/Auto BlackLevel/Gamma Correction/LUT etc.;
- Color cameras support automatic white balance;
- Support for FFC function to provide more uniform picture quality;
- Support fan speed adaptive function for setting the target temperature of the sensor;

Dimensions (mm)

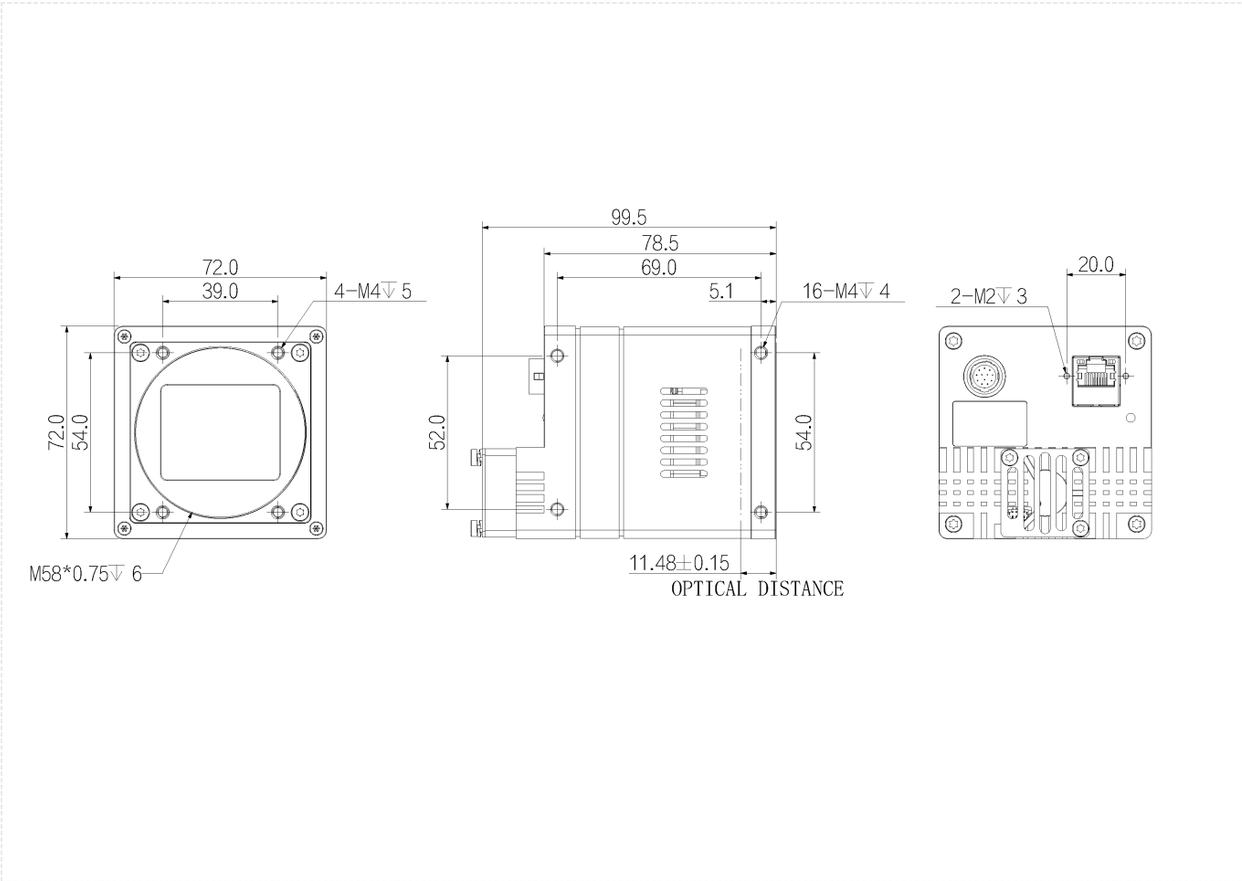

Specification

Model		AX5B51CT250E
Basic	Sensor	PYTHON 25K
	Image Sensor	23.0 mm x 23.0 mm CMOS
	Shutter	Global
	Resolution	5120 × 5120
	Frame Rate	43 fps
	Bit Depth	10 bit
	Mono/Color	Color
	Pixel Size	4.5 μm × 4.5 μm
Image	Pixel	25 MP
	S/N Ratio	41 dB
	WDR	58 dB
	Image Format	BayerRG8/10/10Packed, BayerRG8/10/10Packed
	ROI	Support
	X Flip	Support
	Y Flip	Support
	Gain	1 ~ 32
	White Balance	Support
	Gamma	0 ~ 4, support LUT
	Exposure Time	35 μs ~ 15 s
	Trigger Mode	Software Trigger/Hardware Trigger/Free Run Mode
	SPC	Support
Performance	User Setting	Support two sets of user-defined configurations
	Image Buffer	1 GB
Port	Port	10GigE
	GPIO Interface	3x Opto-isolated input, 3x Opto-isolated output, 1x RS232
	Lens Mount	M58 x 0.75
Power	Power Supply	DC 24V power supply via 12-pin Hirose interface
	Power Consumption	24 V ≈ 21.6 W
Structure	Product Dimensions	72 mm x 72 mm x 78.5 mm (not including rear case connector)
	Weight	583 g
Environment	Working Environment	Storage：-30℃ ~ 80℃；Opeartion：-30℃ ~ 50℃

Connector Pin-out

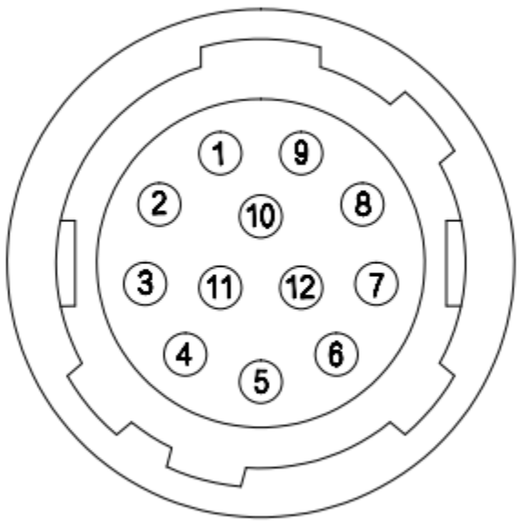

Pin	Signal	Description
1	GND	Power and signal GND
2	Power	Power supply
3	RXD RS232	Serial receive
4	TXD RS232	Serial send
5	Line3	Opto-isolated input
6	Line4	Opto-isolated input
7	Line5	Opto-isolated input
8	OPT_IN_GND	Opto-isolated input GND
9	Line0	Opto-isolated output
10	Line1	Opto-isolated output
11	Line2	Opto-isolated output
12	OPT_OUT_GND	Opto-isolated output GND
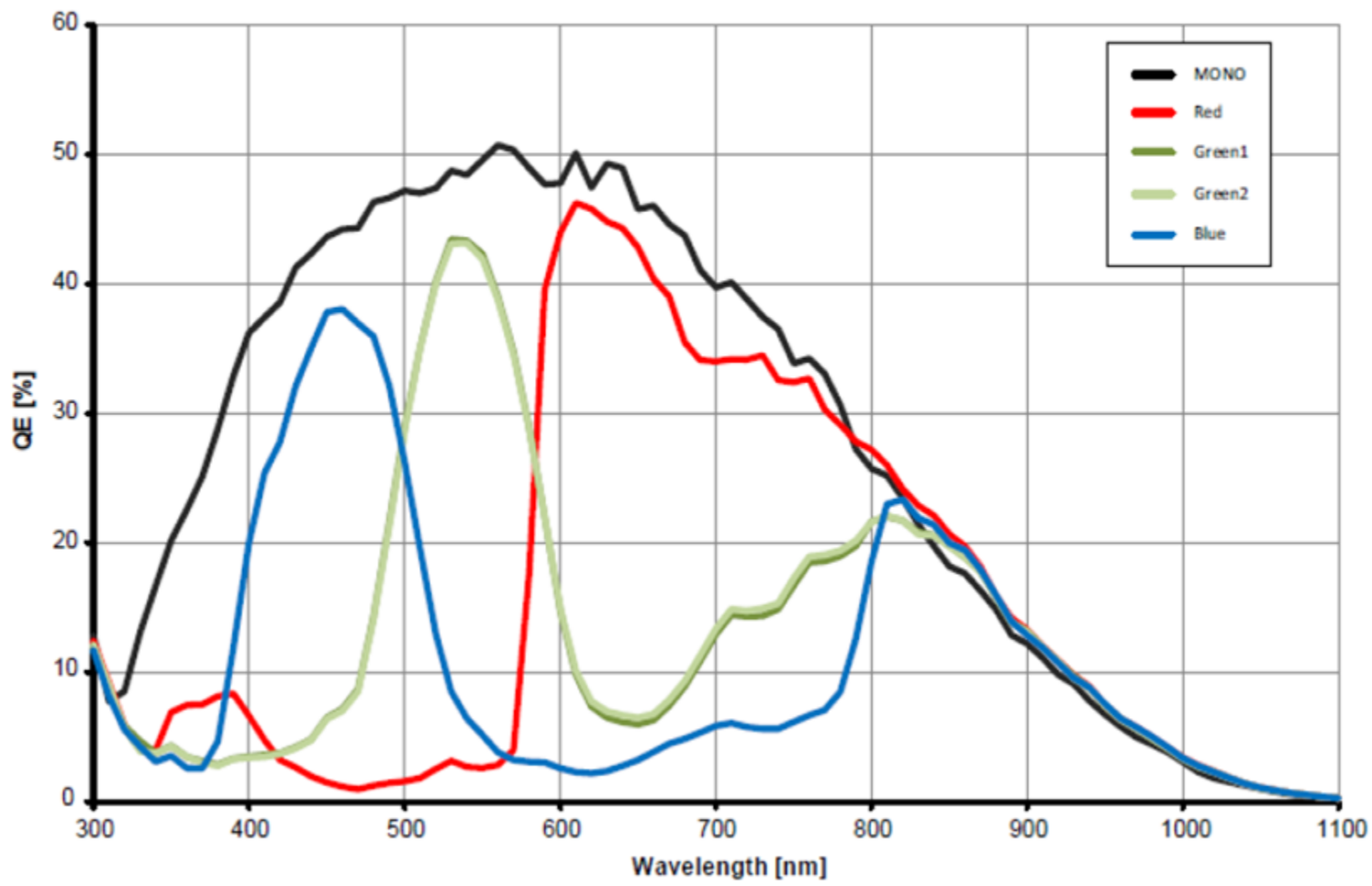
Spectrogram