Large Area Scan Series

AX5B51CG051E

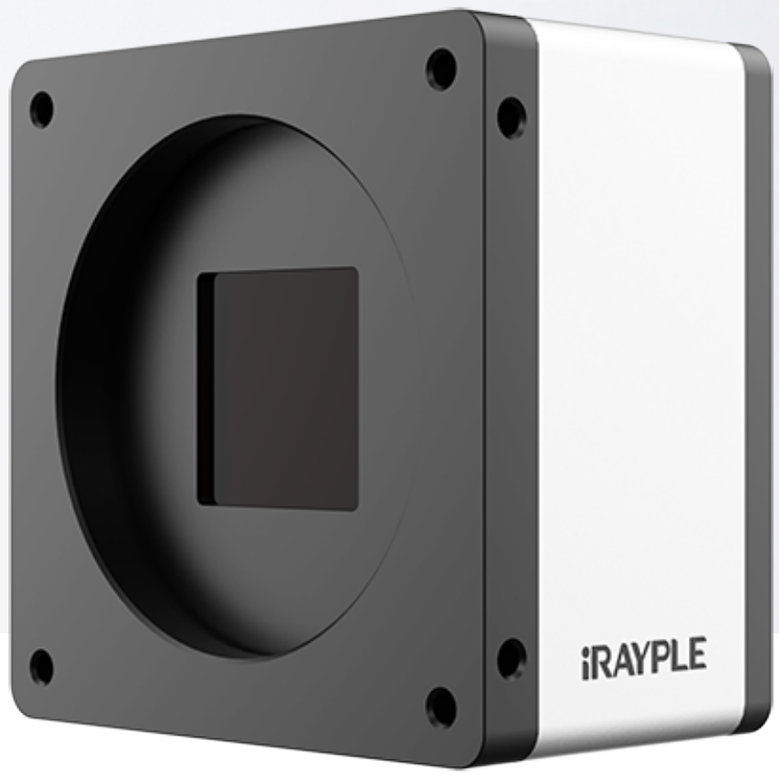

Features

- Gigabit Ethernet interface,provide 1Gbps bandwidth,with a maximum transmission distance of 100m;
- 256MB on-board cache for data transmission or image resend;
- Support Software Trigger/Hardware Trigger/Free Run Mode;
- Support multiple image data format output ROI,vertical mirroring and horizontal mirroring;
- Support Sharpness/Noise Reduction/Auto Exposure/Auto Gain/Auto BlackLevel/Gamma Correction,LUT and other ISP functions;
- Color cameras support automatic white balance;
- Conform to GigE Vision V2.0 protocol and GenICam standard;
- Support for FFC function to provide more uniform picture quality;
- Support DC 12-24V wide voltage power supply;
- Conform to CE, FCC, KC, RoHS;

Dimensions (mm)

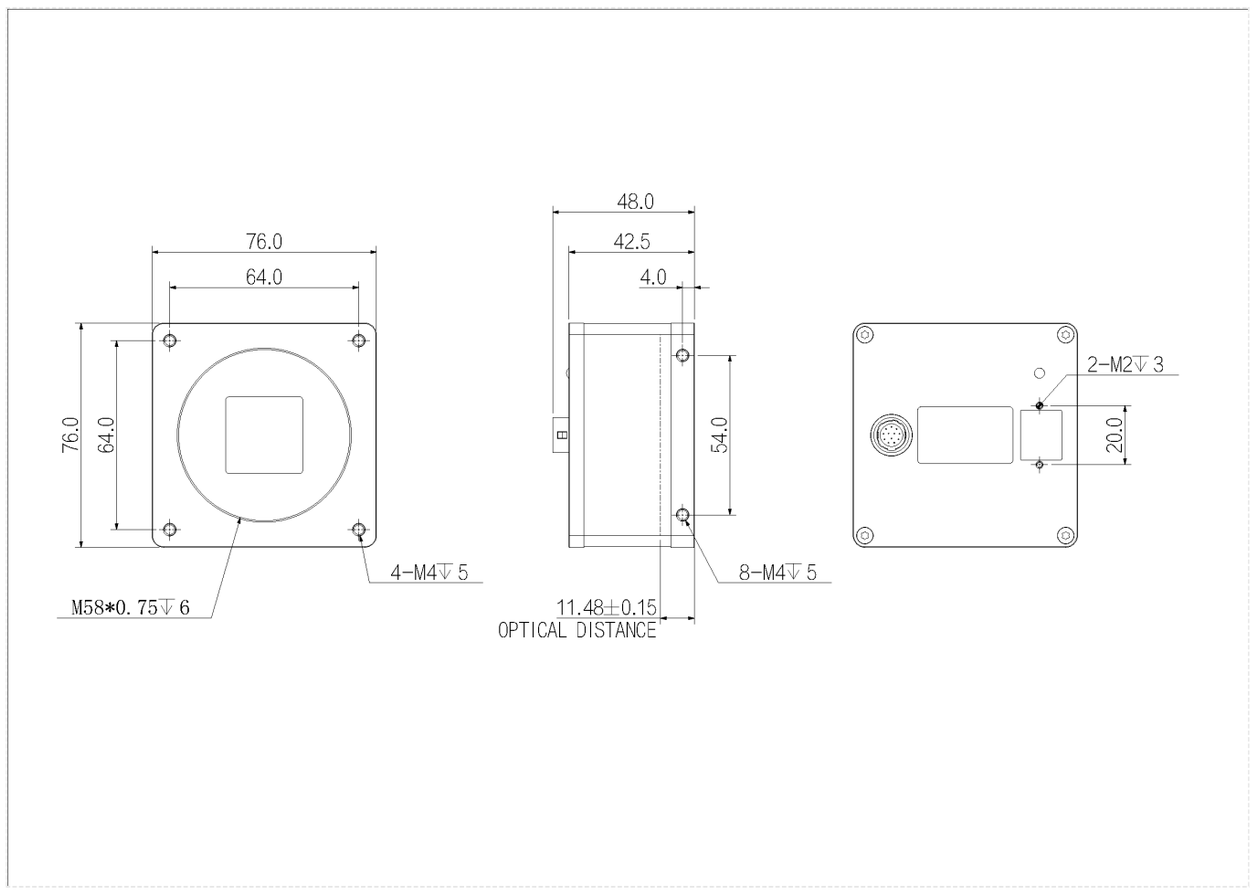

Specification

Model		AX5B51CG051E
Basic	Sensor	PYTHON 25K
	Image Sensor	23.0 mm x 23.0 mm CMOS
	Shutter	Global
	Resolution	5120 x 5120
	Frame Rate	4 fps
	Bit Depth	10 bit
	Mono/Color	Color
	Pixel Size	4.5 μm x 4.5 μm
Image	Pixel	25 MP
	S/N Ratio	41 dB
	WDR	58 dB
	Image Format	Mono8, BayerRG8/10/10Packed, BayerGB8/10/10Packed8, YUV422Packed
	ROI	Support
	X Flip	Support
	Y Flip	Support
	Gain	1 ~ 32
	Gamma	0 ~ 4 , support LUT
	Exposure Time	35 μs ~ 1 s
	Trigger Mode	Software Trigger/Hardware Trigger/Free Run Mode
Performance	User Setting	Support two sets of user-defined configurations
	Image Buffer	256 MB
Port	Port	GigE
	GPIO Interface	3x Opto-isolated input, 3x Opto-isolated output, 1x RS232 interface
	Lens Mount	M58 x 0.75
Power	Power Supply	Voltage range 12 to 24V power supply via the 12-pin Hirose interface
	Power Consumption	24 V ≈ 9 W
Structure	Product Dimensions	76 mm x 76 mm x 46 mm ((not including the rear case connector)
	Weight	370 g
Environment	Working Environment	Storage：-30℃ ~ 80℃ ; Opeartion：-30℃ ~ 50℃

Connector Pin-out

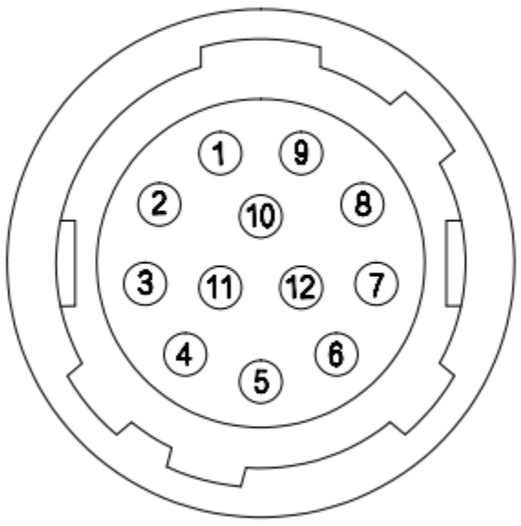

Pin	Signal	Description
1	GND	Power and signal GND
2	Power	Power supply
3	RXD RS232	Serial receive
4	TXD RS232	Serial send
5	Line3	Opto-isolated input
6	Line4	Opto-isolated input
7	Line5	Opto-isolated input
8	OPT_IN_GND	Opto-isolated input GND
9	Line0	Opto-isolated output
10	Line1	Opto-isolated output
11	Line2	Opto-isolated output
12	OPT_OUT_GND	Opto-isolated output GND
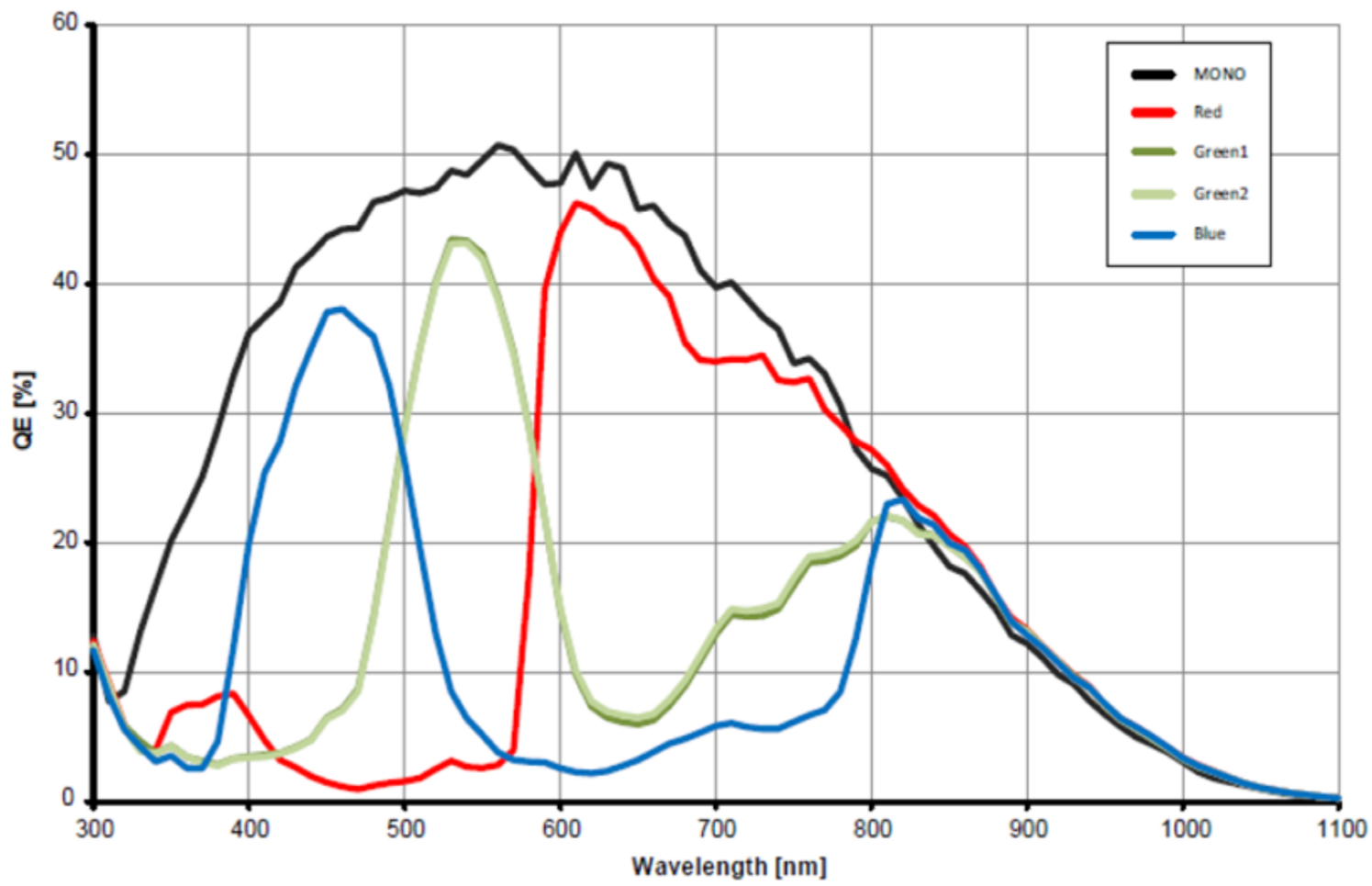
Spectrogram