Large Area Scan Series

AX5A22CX050E

Features

- CXP-6 interface, 4 x 6.25Gbps theoretical transfer bandwidth;
- Support hardware trigger/free run mode;
- Support pixel-by-pixel FFC function;
- Support multiple image data formats output, ROI and etc. ;
- Support PoCXP and DC 24V power supply;
- Conforms to CoaXPress protocol and GenICam standard;
- Conform to CE, FCC, KC and RoHS;

Dimensions (mm)

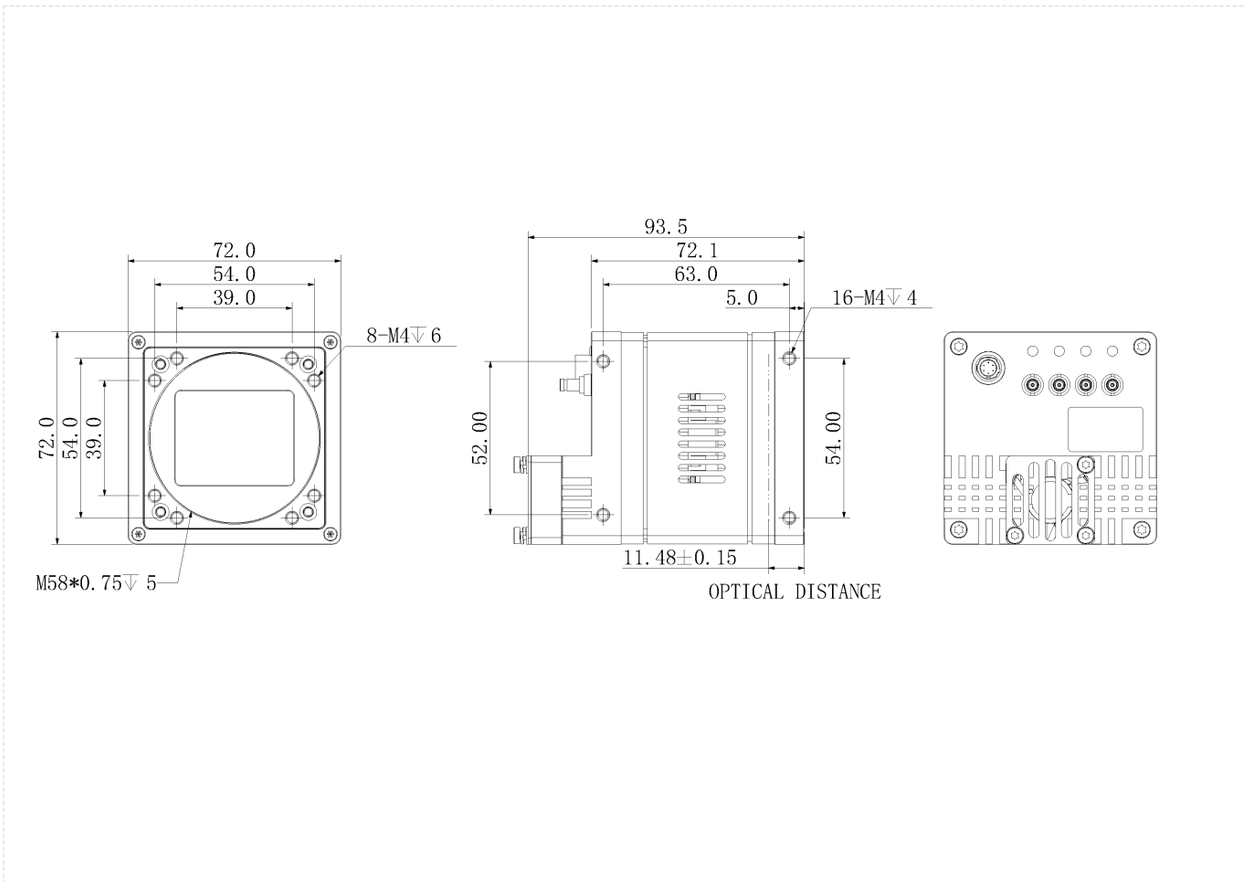

Specification

Model		AX5A22CX050E
Basic	Sensor	CMV12000
	Image Sensor	22.5 mm × 16.9 mm CMOS
	Shutter	Global
	Resolution	4096 × 3072
	Frame Rate	188 fps
	Bit Depth	10 bit
	Mono/Color	Color
	Pixel Size	5.5 × 5.5
Image	Pixel	12MP
	S/N Ratio	41.3dB
	WDR	60dB
	Image Format	BayerGR8 /BayerGR10 /BayerGR12 /BayerRG8 /BayerRG10 /BayerRG12/BayerGB8/BayerGB10/BayerGB12/BayerBG8/BayerBG10/BayerBG12
	ROI	Support
	X Flip	Support
	Y Flip	Support
	Gain	1~100
	White Balance	Support
	Exposure Time	50μS~5S
	Trigger Mode	Software Trigger/Hardware Trigger/Free Run Mode
	SPC	Support
Performance	User Setting	Support two sets of user-defined configurations
	Image Buffer	2GB data cache
Port	Port	CXP-6
	GPIO Interface	3x configurable input and output
	Lens Mount	M58 x 0.75
Power	Power Supply	DC24V power supply via 6-pin Hirose interface
	Power Consumption	24V≈15W
Structure	Product Dimensions	72mm*72mm*72mm(not including rear case connector)
	Weight	720g
Environment	Working Environment	Storage:- 30℃~+80℃ ; Operation:- 30℃~+50℃

Connector Pin-out

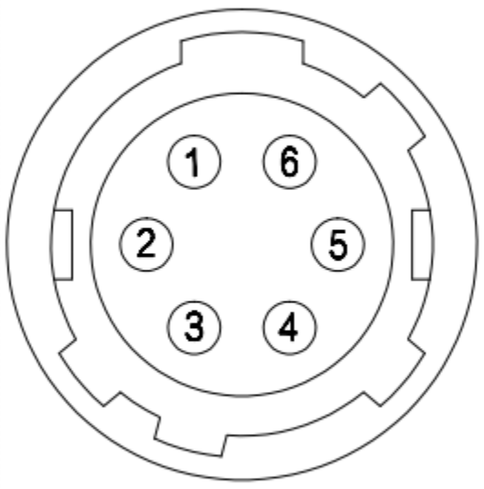

Pin	Signal	Description
1	Power	Power supply
2	Line0	Dual-direcion configurable non-isolated I/O
3	Line1	Dual-direcion configurable non-isolated I/O
4	Line2	Dual-direcion configurable non-isolated I/O
5	Signal_GND	Signal GND
6	GND	Power GND
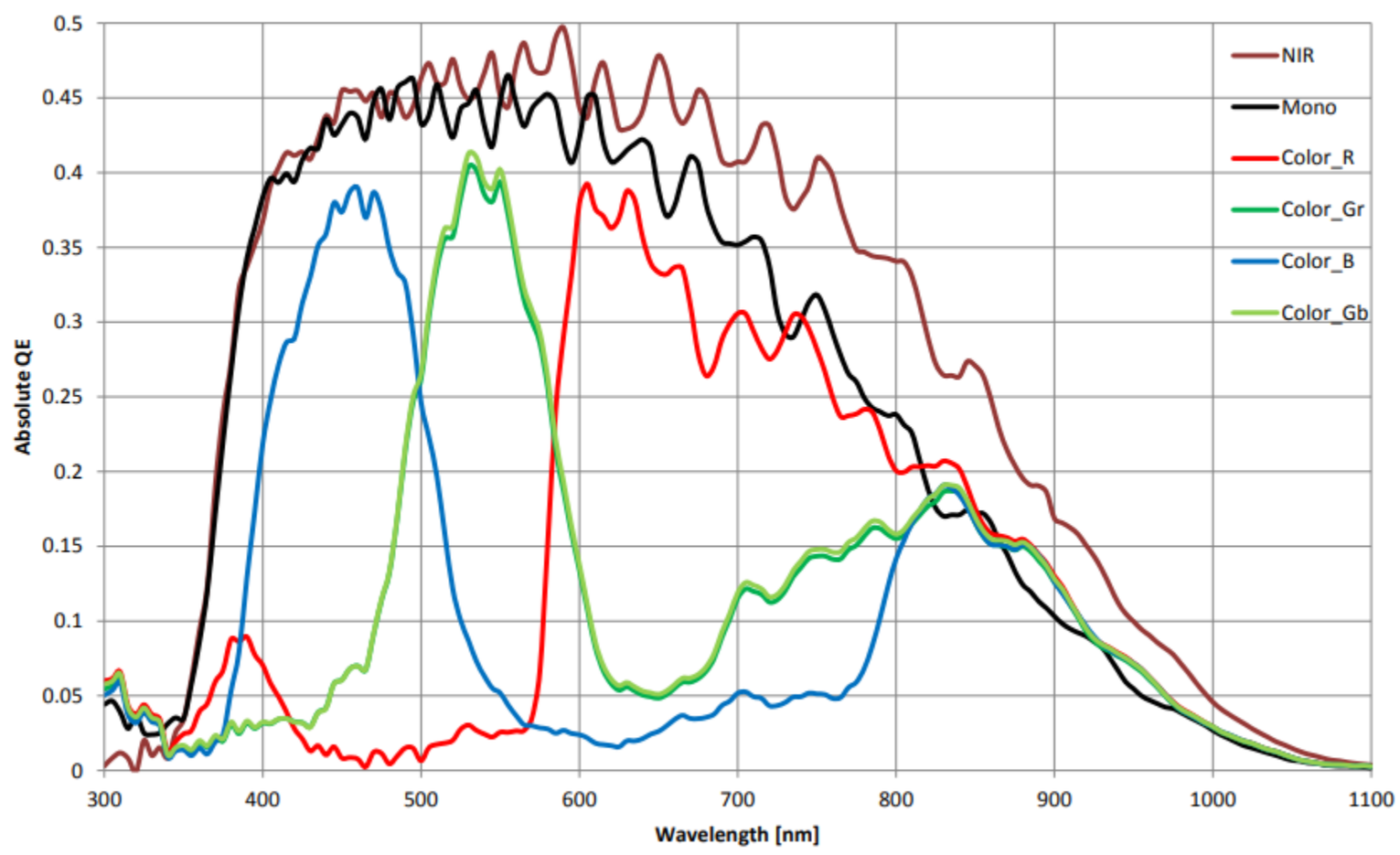
Spectrogram