Large Area Scan Series

A9B57MX250E

Features

- CXP-6 interface, 4*6.25Gbps theoretical transfer bandwidth;
- Support hardware trigger/free run mode;
- Support FFC;
- Support multiple image data formats output, ROI and etc. ;
- Conforms to CoaXPress protocol and GenICam standard;
- Support PoCXP and DC 24V power supply;
- Conform to CE, FCC, UL and RoHS;

Dimensions (mm)

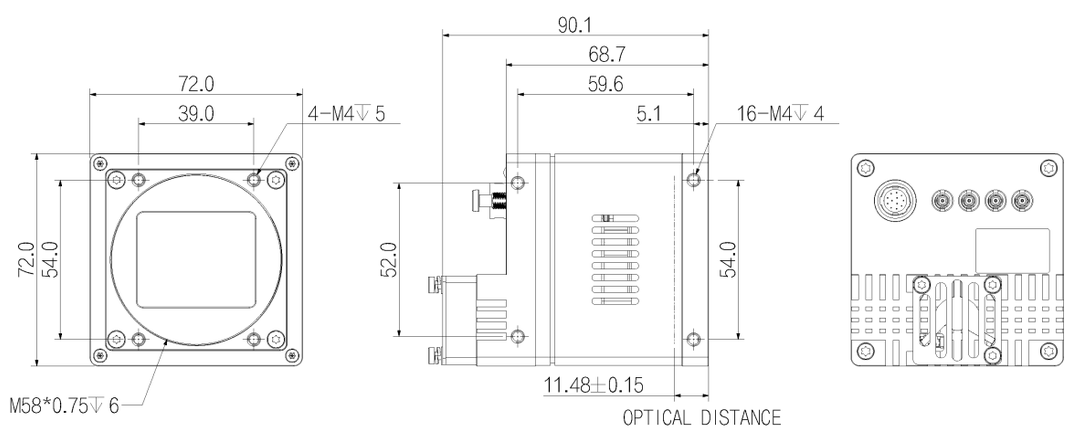

Specification

Model		A9B57MX250E
Basic	Sensor	GMAX0505
	Image Sensor	1.1" CMOS
	Shutter	Global
	Resolution	5120 × 5120
	Frame Rate	90 fps
	Bit Depth	10
	Mono/Color	Mono
	Pixel Size	2.5 μm × 2.5 μm
Image	Pixel	25MP
	S/N Ratio	36dB
	WDR	63dB
	Image Format	Mono8/Mono10/Mono12
	ROI	Support
	X Flip	Support
	Y Flip	Support
	Gain	1~100
	Exposure Time	25μS~5S
	Trigger Mode	Software Trigger/Hardware Trigger/Free Run Mode
	SPC	Support
Performance	User Setting	Support two sets of user-defined configurations
	Image Buffer	2GB data cache
Port	Port	CXP-6
	GPIO Interface	3x Opto-isolated input, 3x Opto-isolated output；1x RS232
	Lens Mount	M58 x 0.75
Power	Power Supply	DC 24V power supply via 12-pin Hirose interface;
	Power Consumption	24V≈13W
Structure	Product Dimensions	72 mm × 72 mm × 70 mm (not including rear case connector)
	Net Weight	720 g
Environment	Storage Temperature	- 30℃~+80℃
	Operating Temperature	- 30℃~+50℃

Connector Pin-out

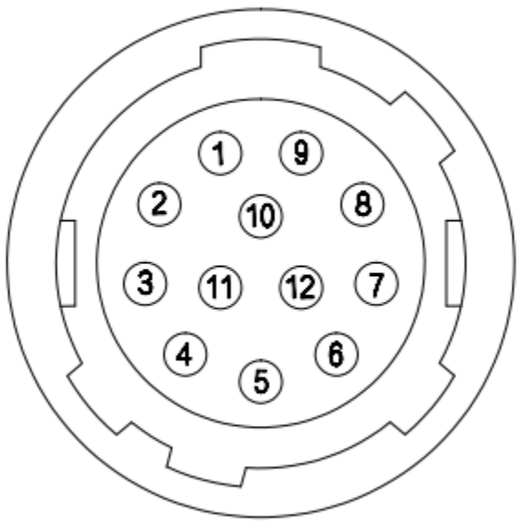

Pin	Signal	Description
1	GND	Power and signal GND
2	Power	Power supply
3	RXD RS232	Serial receive
4	TXD RS232	Serial send
5	Line3	Opto-isolated input
6	Line4	Opto-isolated input
7	Line5	Opto-isolated input
8	OPT_IN_GND	Opto-isolated input GND
9	Line0	Opto-isolated output
10	Line1	Opto-isolated output
11	Line2	Opto-isolated output
12	OPT_OUT_GND	Opto-isolated output GND
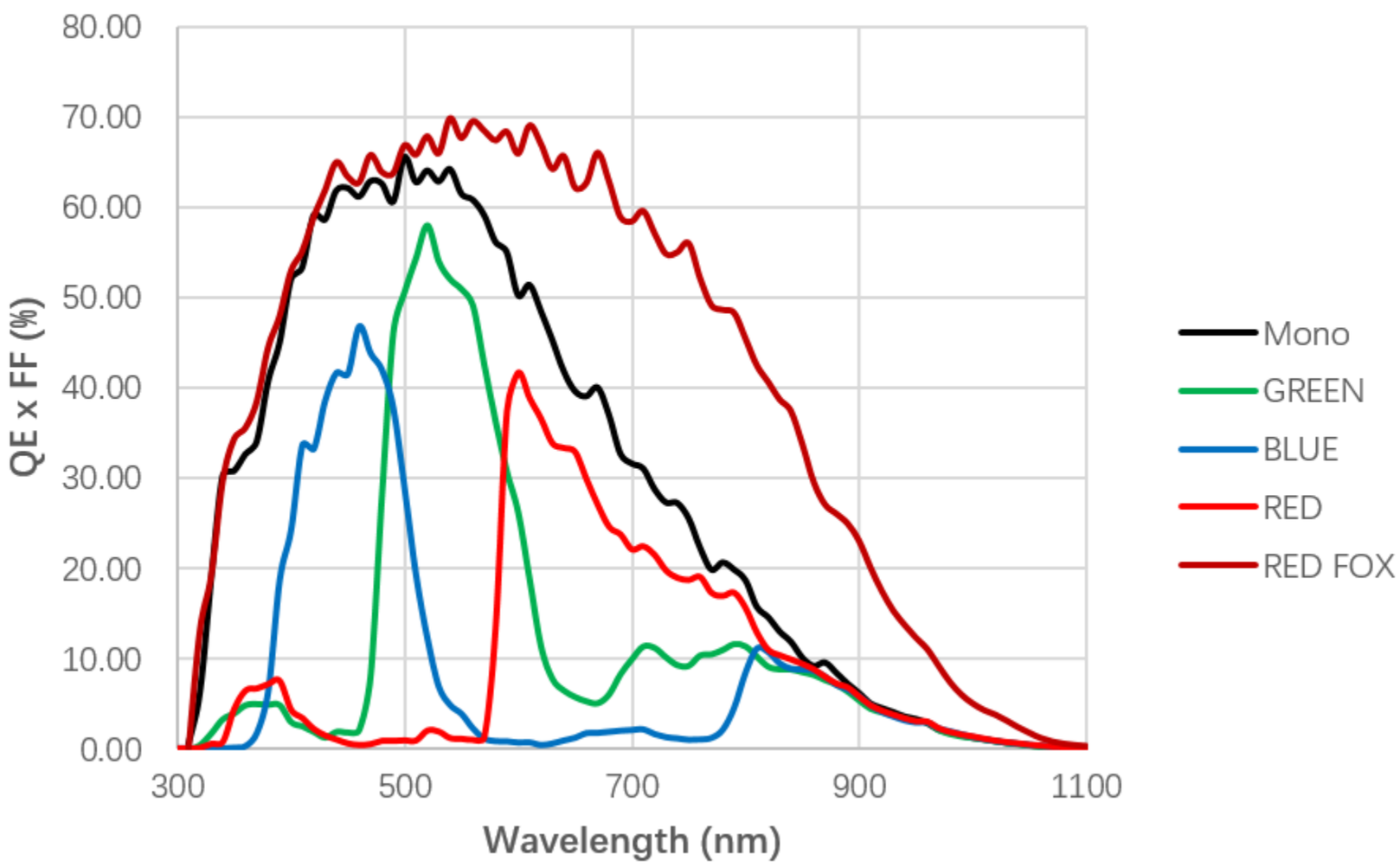
Spectrogram