7000 Series

A7200MG30E

Features

- Gigabit Ethernet interface, providing 1Gbps bandwidth with a maximum transmission distance of 100m;
- 256MB on-board cache for data transmission or image resend;
- Support Software Trigger/Hardware Trigger/Free Run Mode;
- Support ISP functions including Sharpness/Denoising/Gamma/LUT/BlackLevel Correction/TargetBrightness/Contrast etc.;
- Color cameras support interpolation, white balance, color conversion matrix, chroma, saturation, etc.;
- Support multiple image data formats output/ROI/Mirror, etc.;
- Conform to GigE Vision V2.0 protocol and GenICam standard;
- Support PoE power supply, DC 9V~24V wide voltage power supply;
- Conform to CE, FCC, RoHS;

Dimensions (mm)

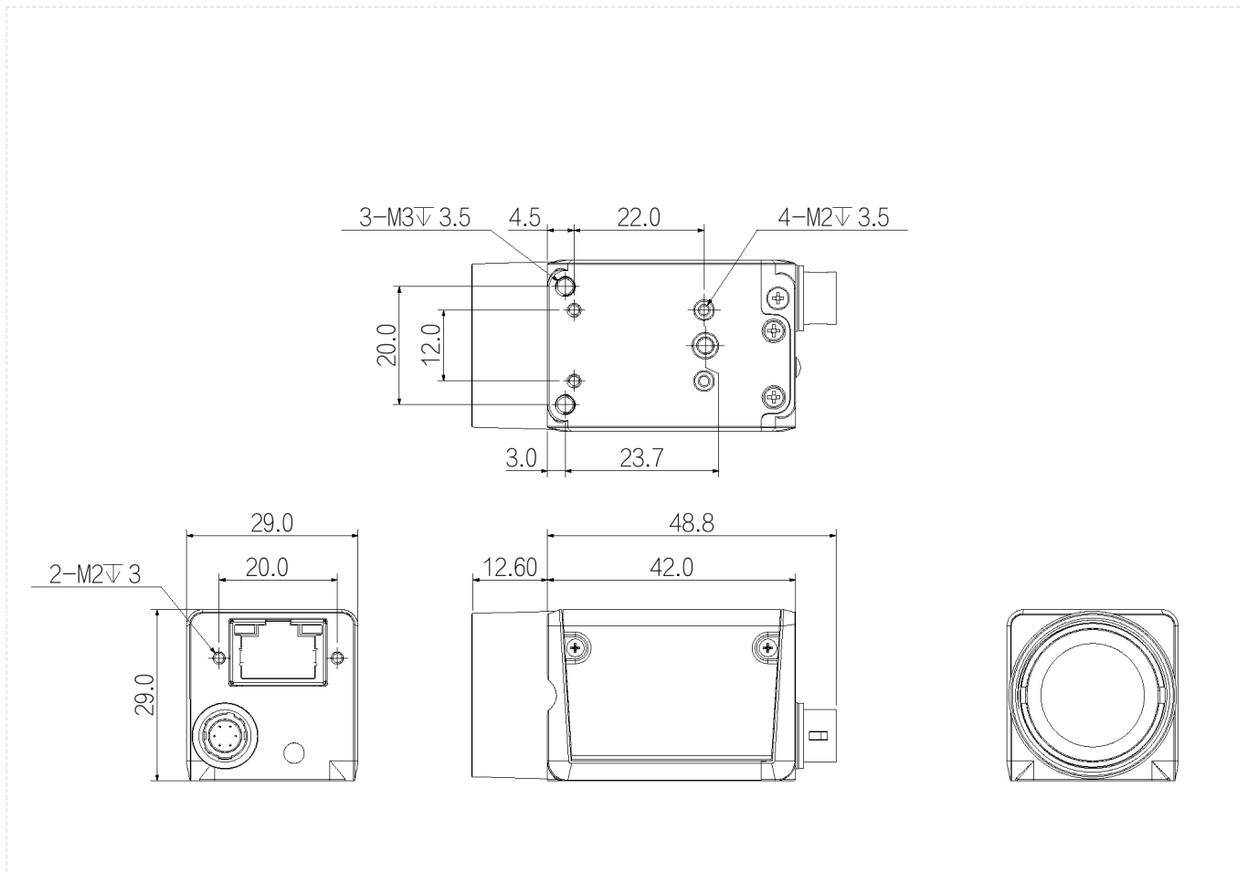

Specification

Model		A7200MG30E
Basic	Sensor	IMX249
	Image Sensor	1/1.2''CMOS
	Shutter	Global
	Resolution	1920 × 1200
	Frame Rate	38 fps
	Bit Depth	12
	Mono/Color	Mono
	Pixel Size	5.86 × 5.86
Image	Pixel	2.3MP
	S/N Ratio	>38dB
	WDR	70dB
	Image Format	Mono8/10/10Packed/12/12Packed
	Binning	Support
	ROI	Support
	X Flip	Support
	Y Flip	Support
	Gain	1~32
	Gamma	From 0 to 4, support LUT
	Exposure Time	26μS~1S
	Trigger Mode	Software Trigger/Hardware Trigger/Free Run Mode
	SPC	Support
Performance	User Setting	Support two sets of user-defined configurations
	Image Buffer	256MB
Port	Port	GigE, PoE
	GPIO Interface	1x 6 pin Hirose: 1x Opto-isolated input, 1x Opto-isolated output, 1 configurable input and output
	Lens Mount	C-mount
Power	Power Supply	PoE/ DC 9V~24V power supply via Hirose interface
	Power Consumption	12V≈2.8W
Structure	Product Dimensions	29mm*29mm*42mm (not including lens mount and rear case connector)
	Weight	88g
Environment	Working Environment	Storage: - 30℃~+80℃ ; Operation: - 30℃~+50℃

Connector Pin-out

Definitions of camera 6-pin ports:

Pin	Description	Features
1	-	+9VDC to 24VDC power supply
2	Line1	Opto-isolated input
3	Line2	GPIO (I/O can be configured for non-isolated software)[1]
4	Line0	Opto-isolated output
5	-	Opto-isolated signal ground (ISO_GND)
6	-	Camera DC power ground and GPIO signal ground (GND)

Definition of 6-pin power port

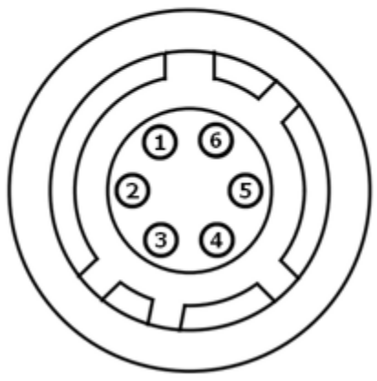

Spectrogram
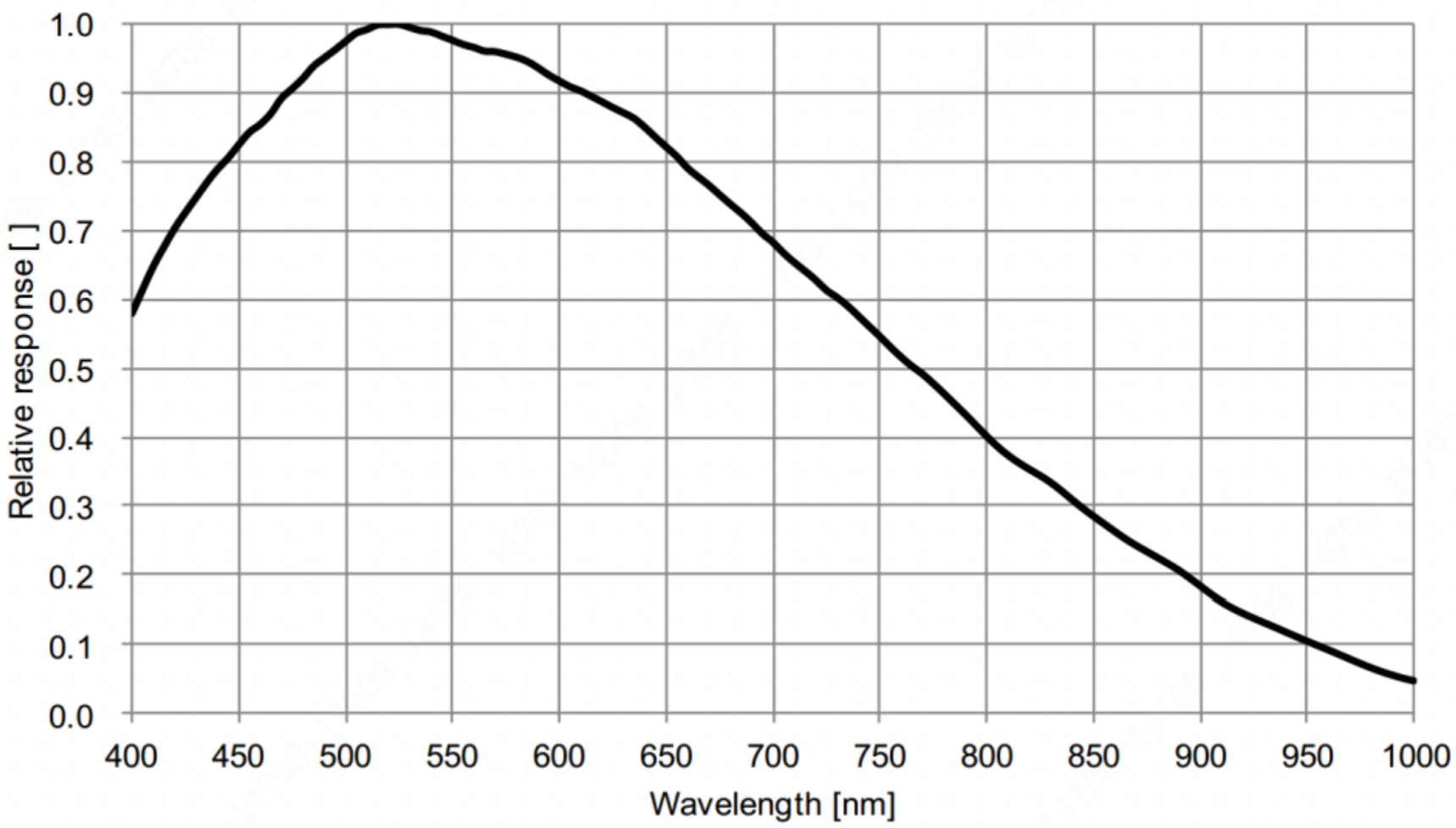
(Excludes lens characteristics and light source characteristics.)