A Series

A3135CU000E

Features

- USB3.0 interface, 5Gbps theoretical transfer bandwidth, power supply via USB interface ;
- Compact size of 29mmx29mmx29mm;
- 128MB on-board cache for data transmission or image resend;
- Support Software Trigger/Hardware Trigger/Free Run Mode;
- Support ISP functions including Sharpness/Denoising/Gamma/LUT/BlackLevel Correction/TargetBrightness etc.;
- Color cameras support interpolation, white balance, color conversion matrix, chroma, saturation, etc. ;
- Support multiple image data formats output/ROI/Mirror, etc. ;
- Compatible with USB3.0 Vision protocol and GenICam standard;
- Comform to CE, FCC, RoHS;

Dimensions (mm)

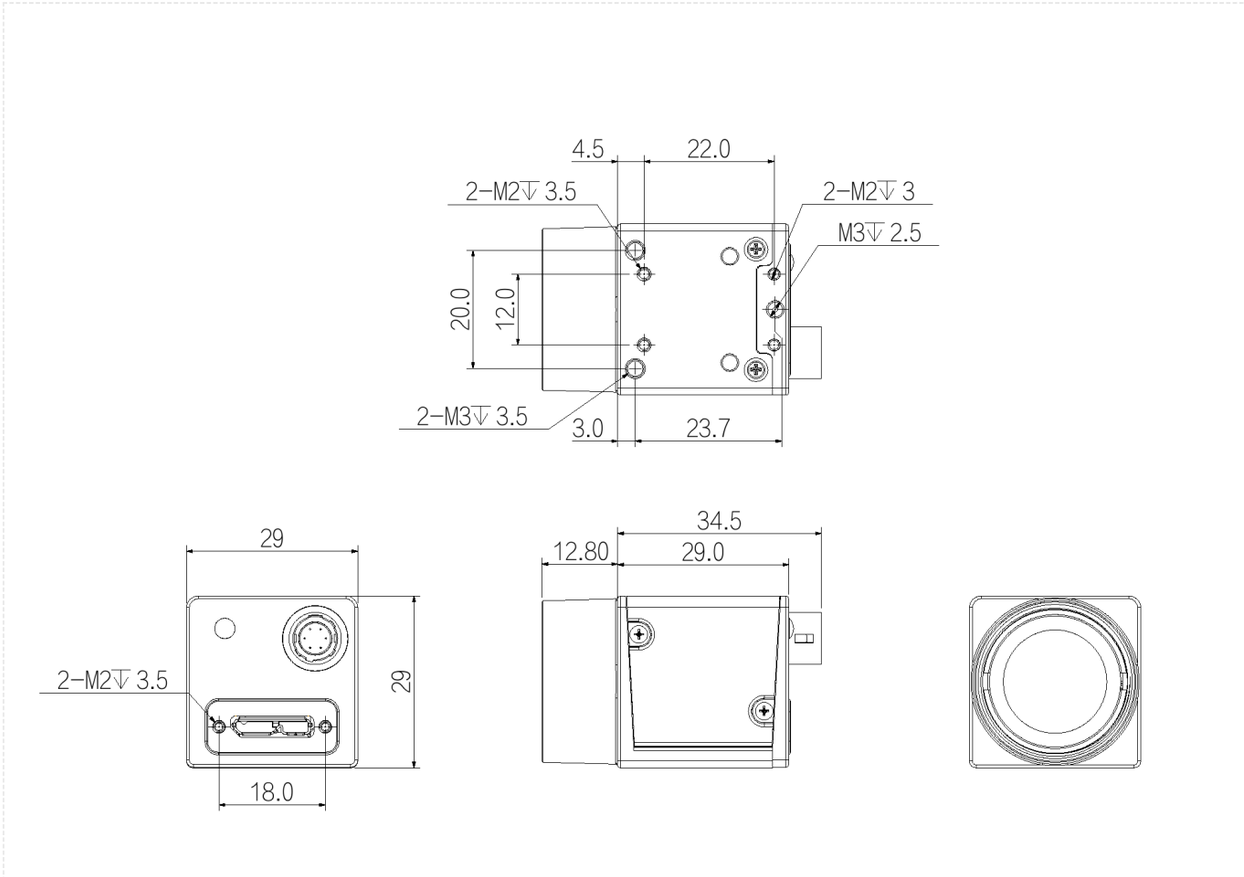

Specification

Model		A3135CU000E
Basic	Sensor	RJ33J4CA0DT
	Image Sensor	1/3"CCD
	Shutter	Global
	Resolution	1280 × 960
	Frame Rate	33 fps
	Bit Depth	14
	Mono/Color	Color
	Pixel Size	3.75 μm × 3.75 μm
Image	Pixel	1.2MP
	S/N Ratio	>38dB
	Dynamic Range	63dB
	Image Format	BayerRG8/10/10Packed，BayerGB8/10/10Packed
	ROI	Support
	Gain	1~32
	White Balance	Automatic white balance
	Gamma	From 0 to 4，support LUT
	Exposure Time	1μS~1S
	Trigger Mode	Software Trigger/Hardware Trigger/Free Run Mode
	SPC	Support
Performance	User Setting	Support two sets of user-defined configurations
	Image Buffer	64MB
Port	Port	USB3.0
	GPIO Interface	6 pin Hirose: 1x Opto-isolated input, 1x Opto-isolated output, 1 configurable input and output
	Lens Mount	C
Power	Power Supply	Power supply via USB connector /DC power supply by Hirose connector, with voltage range from 9V to 24V
	Power Consumption	≈2.4W
Structure	Product Dimensions	29mm×29mm×29mm
	Net Weight	68 g
Environment	Storage Temperature	-30℃~+80℃
	Operating Temperature	-30℃~+50℃

Connector Pin-out

Definitions of camera 6-pin ports:

Pin	Description	Features
1	-	+9VDC to 24VDC power supply
2	Line1	Opto-isolated input
3	Line2	GPIO (I/O can be configured for non-isolated software)[1]
4	Line0	Opto-isolated output
5	-	Opto-isolated signal ground (ISO_GND)
6	-	Camera DC power ground and GPIO signal ground (GND)

Definition of 6-pin power port

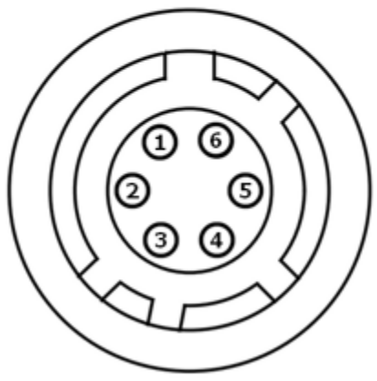
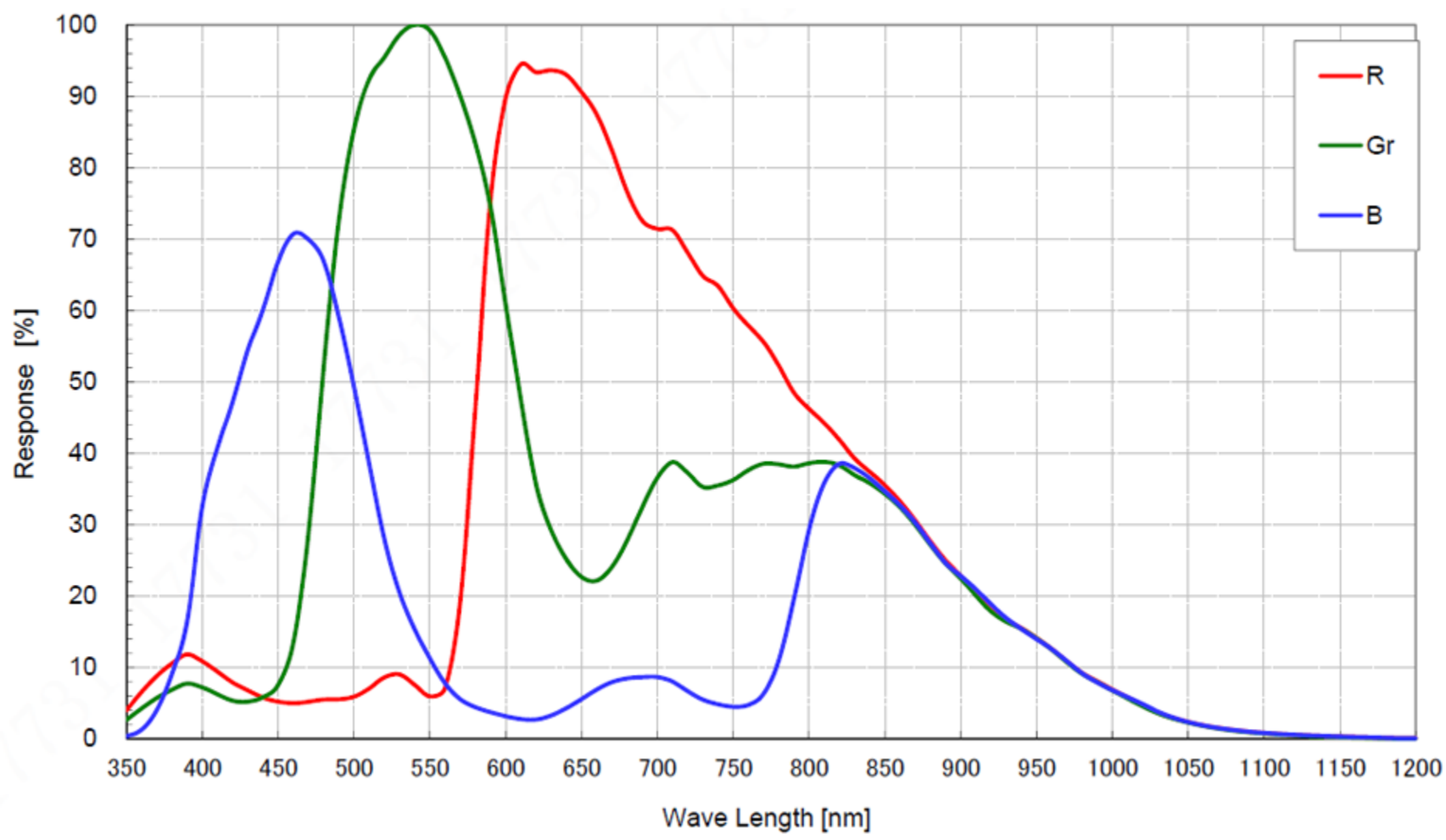
Spectrogram