3000 Series

A3131MG000E

Features

- Gigabit Ethernet interface, providing 1Gbps bandwidth with a maximum transmission distance of 100m;
- 256MB on-board cache for data transmission or image resend;
- Support Software Trigger/Hardware Trigger/Free Run Mode;
- Support ISP functions including Sharpness/Denoising/Gamma/LUT/BlackLevel Correction/TargetBrightness/Contrast etc.;
- Color cameras support interpolation, white balance, color conversion matrix, chroma, saturation, etc.;
- Support multiple image data formats output/ROI/Mirror, etc.;
- Conform to GigE Vision V2.0 protocol and GenICam standard;
- Support PoE power supply, DC 9V~24V wide voltage power supply;
- Conform to CE, FCC, RoHS;

Dimensions (mm)

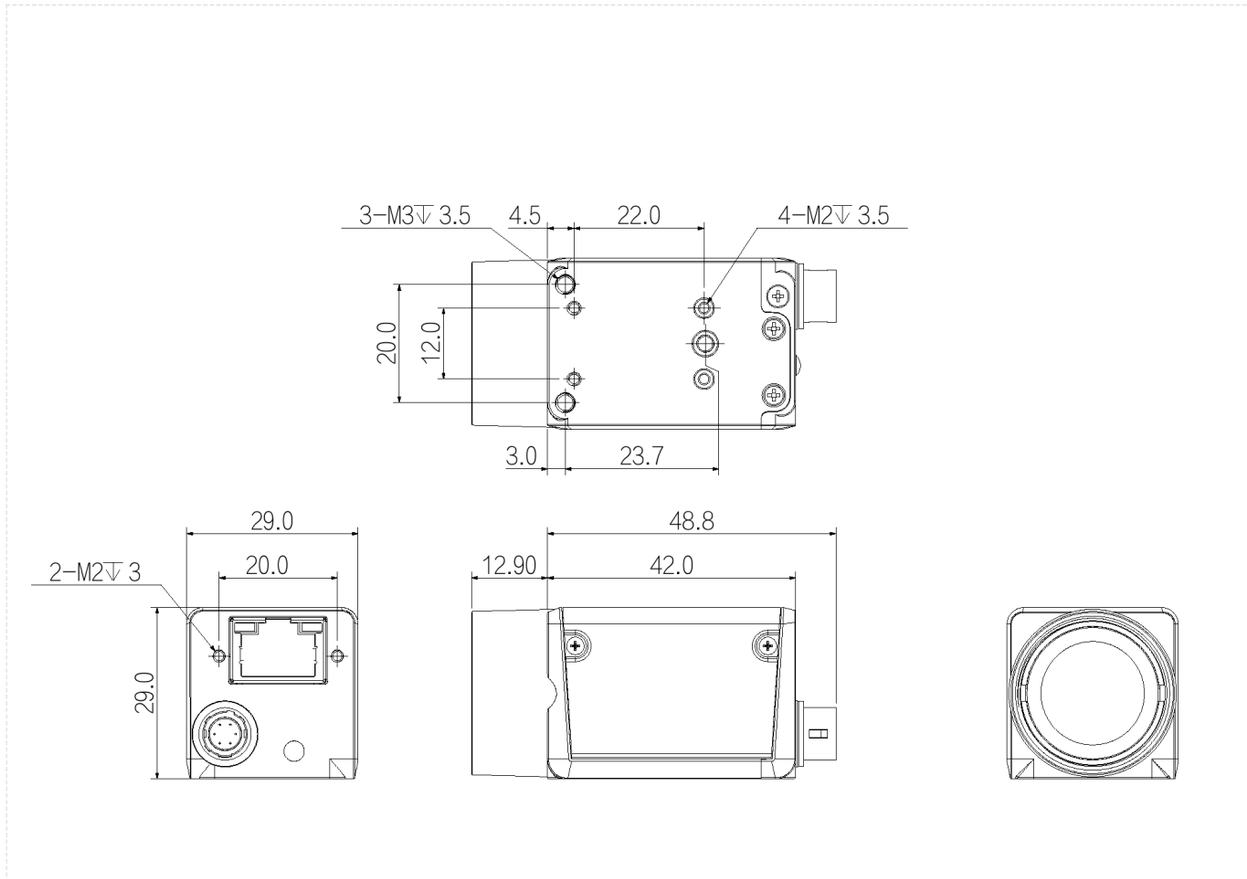

Specification

Model		A3131MG000E
Basic	Sensor	PYTHON 1300
	Image Sensor	1/2"CMOS
	Shutter	Global
	Resolution	1280 × 1024
	Frame Rate	60 fps
	Bit Depth	10
	Mono/Color	黑白
	Pixel Size	4.8 × 4.8
Image	Pixel	1.3MP
	S/N Ratio	>38dB
	WDR	60dB
	Image Format	Mono8/10/10Packed
	Binning	Support
	Decimation	Support
	ROI	Support
	Gain	1~32
	Gamma	From 0 to 4，support LUT
	Exposure Time	1μS~1S
	Trigger Mode	Software Trigger/Hardware Trigger/Free Run Mode
	SPC	Support
	FPN	Support
Performance	User Setting	Support two sets of user-defined configurations
	Image Buffer	256MB
Port	Port	GigE
	GPIO Interface	1x 6 pin Hirose: 1x Opto-isolated input, 1x Opto-isolated output
	Lens Mount	C-mount
Power	Power Supply	PoE/ DC 9V~24V power supply via Hirose interface
	Power Consumption	12V≈3.4W
Structure	Product Dimensions	29mm*29mm*42mm
	Weight	88g
Environment	Working Environment	Storage: - 30℃~+80℃；Operation: - 30℃~+50℃

Connector Pin-out

Definitions of camera 6-pin ports:

Pin	Description	Features
1	-	+9VDC to 24VDC power supply
2	Line1	Opto-isolated input
3	Line2	GPIO (I/O can be configured for non-isolated software)[1]
4	Line0	Opto-isolated output
5	-	Opto-isolated signal ground (ISO_GND)
6	-	Camera DC power ground and GPIO signal ground (GND)

Definition of 6-pin power port

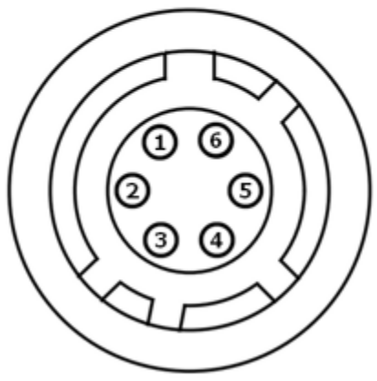
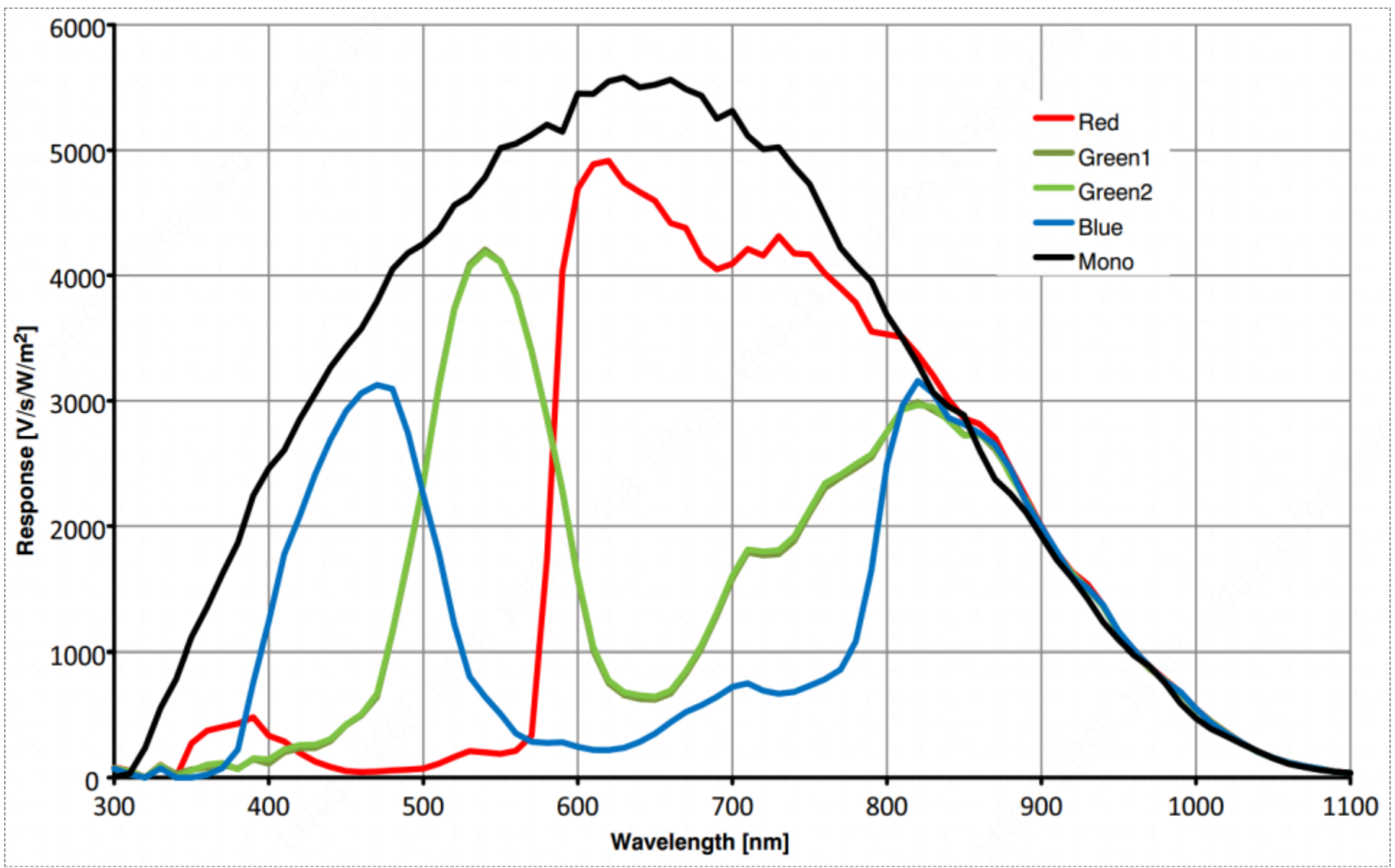
Spectrogram